L6710

6 BIT PROGRAMMABLE DUAL-PHASE CONTROLLER WITH DYNAMIC VID MANAGEMENT

- 2 PHASE OPERATION WITH SYNCRHONOUS RECTIFIER CONTROL
- ULTRA FAST LOAD TRANSIENT RESPONSE
- INTEGRATED HIGH CURRENT GATE DRIVERS: UP TO 2A GATE CURRENT
- 6 BIT PROGRAMMABLE OUTPUT COMPLIANT WITH VRD 10
- DYNAMIC VID MANAGEMENT
- 0.5% OUTPUT VOLTAGE ACCURACY
- 10% ACTIVE CURRENT SHARING ACCURACY
- DIGITAL 2048 STEP SOFT-START
- OVERVOLTAGE PROTECTION
- OVERCURRENT PROTECTION REALIZED USING THE LOWER MOSFET'S R_{dsON} OR A SENSE RESISTOR
- OSCILLATOR EXTERNALLY ADJUSTABLE AND INTERNALLY FIXED AT 150kHz
- POWER GOOD OUTPUT AND ENABLE FUNCTION
- INTEGRATED REMOTE SENSE BUFFER

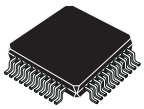

TQFP44 (10 x 10 x 1mm) Exposed Pad

ORDERING NUMBERS:L6710
L6710TR (Tape & Reel)

APPLICATIONS

- POWER SUPPLY FOR HIGH CURRENT MICROPROCESSORS
- POWER SUPPLY FOR SERVER AND WORKSTATION
- DISTRIBUTED POWER SUPPLY

DESCRIPTION

The device implements a two phase step-down controller with a 180 phase-shift between each phase with integrated high current drivers in a compact 10x10mm body package with exposed pad. A precise 6-bit digital to analog converter (DAC) allows adjusting the output voltage from 0.8375V to 1.6000V with 12.5mV binary steps managing Dynamic VID code changes.

The high precision internal reference assures the selected output voltage to be within 0.5% over line and temperature variations. The high peak current gate drive affords to have fast switching to the external power mos providing low switching losses.

The device assures a fast protection against load over current and load over/under voltage. An internal crowbar is provided turning on the low side mosfet if an over-voltage is detected.

In case of over-current, the system works in Constant Current mode until UVP

PIN CONNECTION (top view)

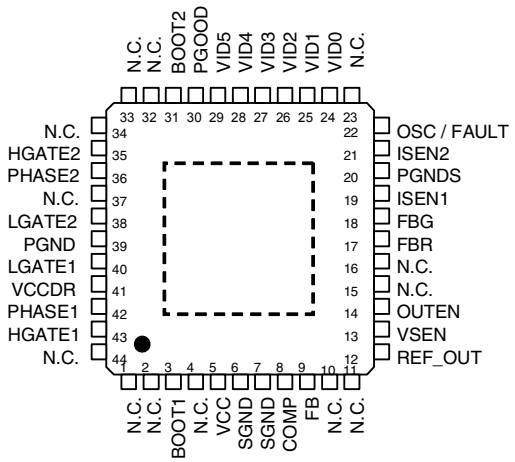

Obsolete Product(s) - Obsolete Product(s)

BLOCK DIAGRAM

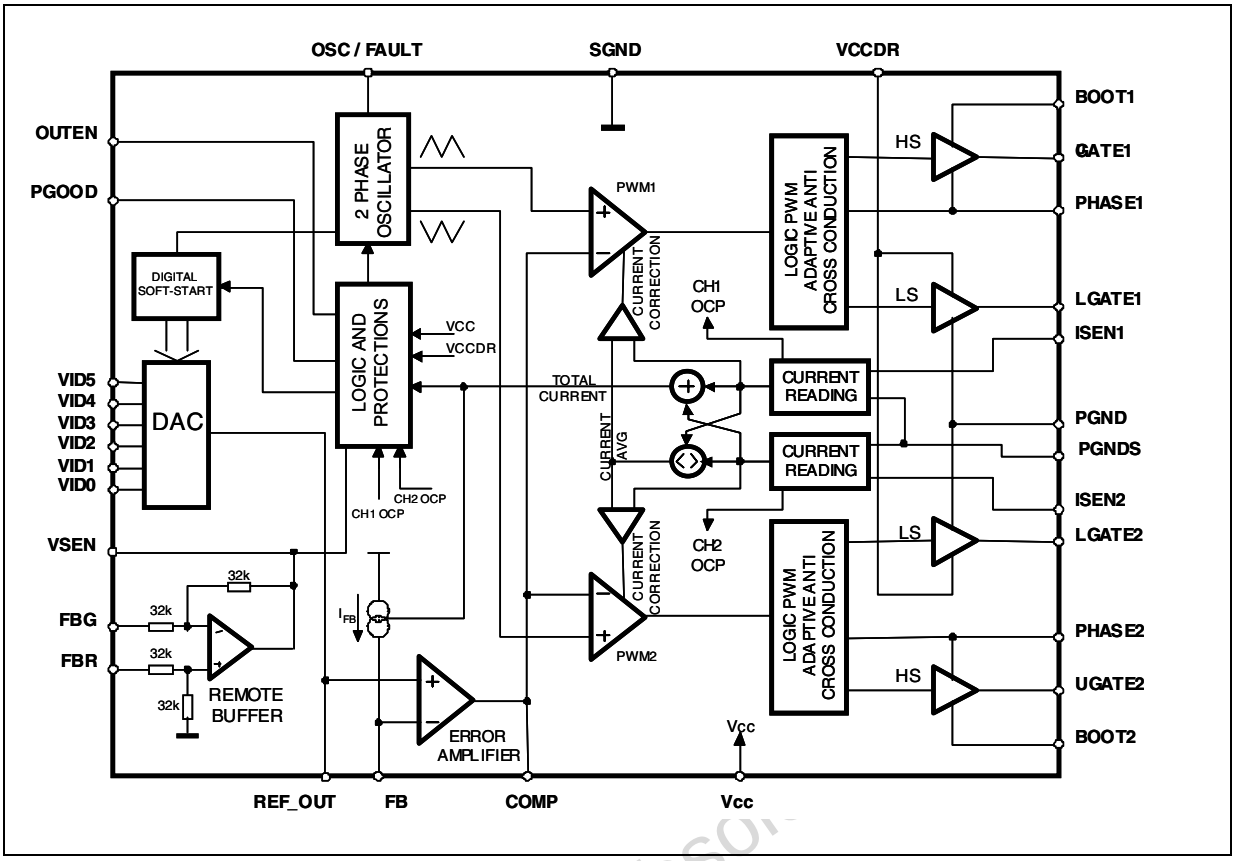

ABSOLUTE MAXIMUM RATINGS

Symbol	Parameter	Value	Unit
Vcc, V_{CCDR}	To PGND	15	V
V_{BOOT}-V_{PHASE}	Boot Voltage	15	V
V_{UGATE1}-V_{PHASE1} V_{UGATE2}-V_{PHASE2}		15	V
	LGATE1, PHASE1, LGATE2, PHASE2 to PGND	-0.3 to Vcc+0.3	V
	VID0 to VID5	-0.3 to 5	V
	All other pins to PGND	-0.3 to 7	V
V_{PHASEx}	Sustainable Peak Voltage. T<20nS @ 600kHz	26	V

THERMAL DATA

Symbol	Parameter	Value	Unit
$R_{th\ j\text{-}amb}$	Thermal Resistance Junction to Ambient	40	°C/W
T_{max}	Maximum junction temperature	150	°C
T_{stg}	Storage temperature range	-40 to 150	°C
T_j	Junction Temperature Range	0 to 125	°C
P_{MAX}	Max power dissipation at Tamb=25°C	2.5	W

Obsolete Product(s) - Obsolete

PIN FUNCTION

N	Name	Description
1	N.C.	Not internally bonded.
2	N.C.	Not internally bonded.
3	BOOT1	Channel 1 HS driver supply. This pin supplies the relative high side driver. Connect through a capacitor (100nF typ.) to the PHASE1 pin and through a diode to VCC (cathode vs. boot).
4	N.C.	Not internally bonded.
5	VCC	Device supply voltage. The operative supply voltage is 12V ±15%. Filter with 1µF (Typ.) capacitor vs. GND.
6,7	SGND	All the internal references are referred to this pin. Connect it to the PCB signal ground.
8	COMP	This pin is connected to the error amplifier output and is used to compensate the control feedback loop.
9	FB	This pin is connected to the error amplifier inverting input and is used to compensate the voltage control feedback loop. A current proportional to the sum of the current sensed in both channel is sourced from this pin (50µA at full load, 70µA at the Constant Current threshold). Connecting a resistor between this pin and VSEN pin allows programming the droop effect.
10,11	N.C.	Not internally bonded.
12	REF_OUT	Reference voltage output used for voltage regulation. The pin is protected against short circuit vs. ground. Filter to SGND with 47nF ceramic capacitor.
13	VSEN	Manages Over&Under-voltage conditions and the PGOOD signal. It is internally connected with the output of the Remote Sense Buffer for Remote Sense of the regulated voltage. If no Remote Sense is implemented, connect it directly to the regulated voltage in order to manage OVP, UVP and PGOOD. Connecting 1nF capacitor max vs. SGND can help in reducing noise injection.
14	OUTEN	Output Enable pin. Internally 3V pulled-up. If forced to a voltage lower than 0.4V, the device stops operation with all mosfets and protections OFF. Setting the pin free, the device re-start operations. Filter with 1nF capacitor vs. SGND to avoid noise injection.
15, 16	N.C.	Not internally bonded.
17	FBR	Remote sense buffer non-inverting input. It has to be connected to the positive side of the load to perform a remote sense. If no remote sense is implemented, connect directly to the output voltage (in this case connect also the VSEN pin directly to the output regulated voltage).
18	FBG	Remote sense buffer inverting input. It has to be connected to the negative side of the load to perform a remote sense. Pull-down to ground if no remote sense is implemented.
19	ISEN1	Channel 1 current sense pin. The output current may be sensed across a sense resistor or across the low-side mosfet R_{dsON}. This pin has to be connected to the low-side mosfet drain or to the sense resistor through a resistor Rg. The net connecting the pin to the sense point must be routed as close as possible to the PGNDS net in order to couple in common mode any picked-up noise.
20	PGNDS	Common Power Ground sense pin. The net connecting the pin to the sense point must be routed as close as possible to the ISENx net in order to couple in common mode any picked-up noise.
21	ISEN2	Channel 2 current sense pin. The output current may be sensed across a sense resistor or across the low-side mosfet R_{dsON}. This pin has to be connected to the low-side mosfet drain or to the sense resistor through a resistor Rg. The net connecting the pin to the sense point must be routed as close as possible to the PGNDS net in order to couple in common mode any picked-up noise.

Obsolete Product(s) - Obsolete Product(s)

PIN FUNCTION (continued)

N	Name	Description
22	OSC/FAULT	Oscillator pin. It allows programming the switching frequency of each channel: the equivalent switching frequency at the load side results in being doubled. Internally fixed at 1.24V, the frequency is varied proportionally to the current sunk (forced) from (into) the pin with an internal gain of 6kHz/µA (See relevant section for details). If the pin is not connected, the switching frequency is 150kHz for each channel (300kHz on the load). The pin is forced high (5V Typ.) when an Over/Under Voltage is detected; to recover from these latched conditions, cycle VCC.
23	N.C.	Not internally bonded.
24 to 29	VID0-5	Voltage IDentification pins. Internally pulled-up, connect to SGND to program a ‘0’ while leave floating to program a ‘1’. They are used to program the output voltage as specified in Table 1 and to set the PGOOD, OVP and UVP thresholds. Since the VID pins program the maximum output voltage, according to VRD10 specs, the device automatically regulates to a voltage VID* = VID–25mV avoiding use of any external component to lower the regulated voltage.
30	PGOOD	This pin is an open collector output and is pulled low if the output voltage is not within the above-specified thresholds and during soft-start. It cannot be pulled up above 3.3V If not used may be left floating.
31	BOOT2	Channel 2 HS driver supply. This pin supplies the relative high side driver. Connect through a capacitor (100nF typ.) to the PHASE2 pin and through a diode to VCC (cathode vs. boot).
32 to 34	N.C.	Not internally bonded.
35	HGATE2	Channel 2 HS driver output. A little series resistor helps in reducing device-dissipated power.
36	PHASE2	Channel 2 HS driver return path. It must be connected to the HS2 mosfet source and provides the return path for the HS driver of channel 2.
37	N.C.	Not internally bonded.
38	LGATE2	Channel 2 LS driver output. A little series resistor helps in reducing device-dissipated power.
39	PGND	LS drivers return path. This pin is common to both sections and it must be connected through the closest path to the LS mosfets source pins in order to reduce the noise injection into the device.
40	LGATE1	Channel 1 LS driver output. A little series resistor helps in reducing device-dissipated power.
41	VCCDR	LS drivers supply: it can be varied from 5V to 12V buses. Filter locally with at least 1µF ceramic cap vs. PGND.
42	PHASE1	Channel 1 HS driver return path. It must be connected to the HS1 mosfet source and provides the return path for the HS driver of channel 1.
43	HGATE1	Channel 1 HS driver output. A little series resistor helps in reducing device-dissipated power.
44	N.C.	Not internally bonded.
PAD	THERMAL PAD	Thermal pad connects the silicon substrate and makes a good thermal contact with the PCB to dissipate the power necessary to drive external mosfets. Connect to the GND plane with several vias to improve thermal conduction.

Obsolete Product(s) - Obsolete Product(s)

ELECTRICAL CHARACTERISTICS

(V_{cc} = 12V±15%, T_J = 0 to 70°C unless otherwise specified)

Symbol	Parameter	Test Condition	Min	Typ	Max	Unit
Vcc SUPPLY CURRENT						
I_{CC}	Vcc supply current	HGATEx and LGATEx open VCCDR=BOOT=12V	7.5	10	12.5	mA
I_{CCDR}	V_{CCDR} supply current	LGATEx open; VCCDR=12V	2	3	4	mA
I_{BOOTx}	Boot supply current	HGATEx open; PHASEx to PGND VCC=BOOTx=12V	0.5	1	1.5	mA
POWER-ON						
	Turn-On V_{CC} threshold	VCC Rising; VCCDR=5V	8.2	9.2	10.2	V
	Turn-Off V_{CC} threshold	VCC Falling; VCCDR=5V	6.5	7.5	8.5	V
	Turn-On V_{CCDR} Threshold	VCCDR Rising VCC=12V	4.2	4.4	4.6	V
	Turn-Off V_{CCDR} Threshold	VCCDR Falling VCC=12V	4.0	4.2	4.4	V
$OUTEN_{IL}$	Output Enable Level	Input Low			0.4	V
$OUTEN_{IH}$		Input High	0.8			V
OSCILLATOR						
f_{OSC}	Initial Accuracy	OSC = OPEN OSC = OPEN; Tj=0°C to 125°C	135 127	150	165 178	kHz kHz
d_{MAX}	Maximum duty cycle	OSC = OPEN: I_{FB}=0 OSC = OPEN; I_{FB}=70µA	72 30	80 40		% %
ΔVosc	Ramp Amplitude			3		V
FAULT	Voltage at pin OSC	OVP or UVP Active	4.75	5.0	5.25	V
REFERENCE AND DAC						
	Output Voltage Accuracy	VID0 to VID5 see Table1; FBR = V_{OUT}; FBG = GND	-0.5	-	0.5	%
REF_OUT	REF_OUT Accuracy	VID0 to VID5 see Table1;	-1.5	-	1.5	%
I_{VID}	VID pull-up Current	VIDx = GND	3	4.5	6	µA
V_{VID}	VID pull-up Voltage	VIDx = OPEN	2.9	-	3.3	V
VID_{IL}	VID Input Level	Input Low			0.4	V
VID_{IH}		Input High	1.0			V
ERROR AMPLIFIER						
A_0	DC Gain			80		dB
SR	Slew-Rate	COMP=10pF		15		V/µs

Obsolete Product(s) - Obsolete Product(s)

ELECTRICAL CHARACTERISTICS (continued)
(V_{CC} = 12V±15%, T_J = 0 to 70°C unless otherwise specified)

Symbol	Parameter	Test Condition	Min	Typ	Max	Unit
DIFFERENTIAL AMPLIFIER (REMOTE BUFFER)						
	DC Gain			1		V/V
CMRR	Common Mode Rejection Ratio			40		dB
SR	Slew Rate	VSEN=10pF		15		V/µs
DIFFERENTIAL CURRENT SENSING						
I_{ISEN1}, I_{ISEN2}	Bias Current	I_{LOAD}=0%	45	50	55	µA
I_{PGNDSx}	Bias Current		45	50	55	µA
I_{ISEN1}, I_{ISEN2}	Bias Current at Over Current Threshold		80	85	90	µA
I_{FB}	Active Droop Current	I_{LOAD}=0		0	1	µA
		I_{LOAD}=100%	47.5	50	52.5	µA
GATE DRIVERS						
$t_{RISE\ HGATE}$	High Side Rise Time	BOOTx-PHASEx=10V; HGATEx to PHASEx=3.3nF		15	30	ns
I_{HGATEx}	High Side Source Current	BOOTx-PHASEx=10V		2		A
R_{HGATEx}	High Side Sink Resistance	BOOTx-PHASEx=10V;		1.8	2.5	Ω
$t_{RISE\ LGATE}$	Low Side Rise Time	VCCDR=10V; LGATEx to PGND=5.6nF		30	55	nS
I_{LGATEx}	Low Side Source Current	VCCDR=10V		1.8		A
R_{LGATEx}	Low Side Sink Resistance	VCCDR=10V		1.1	1.5	Ω
PROTECTIONS						
PGOOD	Upper Threshold (VSEN / DAC Output)	VSEN Rising	108	112	116	%
PGOOD	Lower Threshold (VSEN / DAC Output)	VSEN Falling	84	88	92	%
OVP	Over Voltage Threshold (VSEN / DAC Output)	VSEN Rising	122	126	130	%
UVP	Under Voltage Trip (VSEN / DAC Output)	VSEN Falling	55	60	65	%
V_{PGOODL}	PGOOD Voltage Low	I_{PGOOD} = -4mA			0.4	V
I_{PGOODH}	PGOOD VLeakage	V_{PGOOD} = 3.3V			1	µA

Obsolete Product(s) - Obsolete Product(s)

Table 1. Voltage IDentification (VID) Codes.

VID5	VID4	VID3	VID2	VID1	VID0	Output Voltage (V) (*)	VID5	VID4	VID3	VID2	VID1	VID0	Output Voltage (V) (*)
0	0	1	0	1	0	**0.8375**	0	1	1	0	1	0	**1.2125**
1	0	1	0	0	1	**0.8500**	1	1	1	0	0	1	**1.2250**
0	0	1	0	0	1	**0.8625**	0	1	1	0	0	1	**1.2375**
1	0	1	0	0	0	**0.8750**	1	1	1	0	0	0	**1.2500**
0	0	1	0	0	0	**0.8875**	0	1	1	0	0	0	**1.2625**
1	0	0	1	1	1	**0.9000**	1	1	0	1	1	1	**1.2750**
0	0	0	1	1	1	**0.9125**	0	1	0	1	1	1	**1.2875**
1	0	0	1	1	0	**0.9250**	1	1	0	1	1	0	**1.3000**
0	0	0	1	1	0	**0.9375**	0	1	0	1	1	0	**1.3125**
1	0	0	1	0	1	**0.9500**	1	1	0	1	0	1	**1.3250**
0	0	0	1	0	1	**0.9625**	0	1	0	1	0	1	**1.3375**
1	0	0	1	0	0	**0.9750**	1	1	0	1	0	0	**1.3500**
0	0	0	1	0	0	**0.9875**	0	1	0	1	0	0	**1.3625**
1	0	0	0	1	1	**1.0000**	1	1	0	0	1	1	**1.3750**
0	0	0	0	1	1	**1.0125**	0	1	0	0	1	1	**1.3875**
1	0	0	0	1	0	**1.0250**	1	1	0	0	1	0	**1.4000**
0	0	0	0	1	0	**1.0375**	0	1	0	0	1	0	**1.4125**
1	0	0	0	0	1	**1.0500**	1	1	0	0	0	1	**1.4250**
0	0	0	0	0	1	**1.0625**	0	1	0	0	0	1	**1.4375**
1	0	0	0	0	0	**1.0750**	1	1	0	0	0	0	**1.4500**
0	0	0	0	0	0	**1.0875**	0	1	0	0	0	0	**1.4625**
1	1	1	1	1	1	**OFF**	1	0	1	1	1	1	**1.4750**
0	1	1	1	1	1	**OFF**	0	0	1	1	1	1	**1.4875**
1	1	1	1	1	0	**1.1000**	1	0	1	1	1	0	**1.5000**
0	1	1	1	1	0	**1.1125**	0	0	1	1	1	0	**1.5125**
1	1	1	1	0	1	**1.1250**	1	0	1	1	0	1	**1.5250**
0	1	1	1	0	1	**1.1375**	0	0	1	1	0	1	**1.5375**
1	1	1	1	0	0	**1.1500**	1	0	1	1	0	0	**1.5500**
0	1	1	1	0	0	**1.1625**	0	0	1	1	0	0	**1.5625**
1	1	1	0	1	1	**1.1750**	1	0	1	0	1	1	**1.5750**
0	1	1	0	1	1	**1.1875**	0	0	1	0	1	1	**1.5875**
1	1	1	0	1	0	**1.2000**	1	0	1	0	1	0	**1.6000**

(*) Since the VID pins program the maximum output voltage, according to VRD 10.0 specs, the device automatically regulate to a voltage VID*=VID-25mV avoiding use of any external component to lower the regulated voltage.

Obsolete Product(s) - Obsolete Product(s)

REFERENCE SCHEMATIC

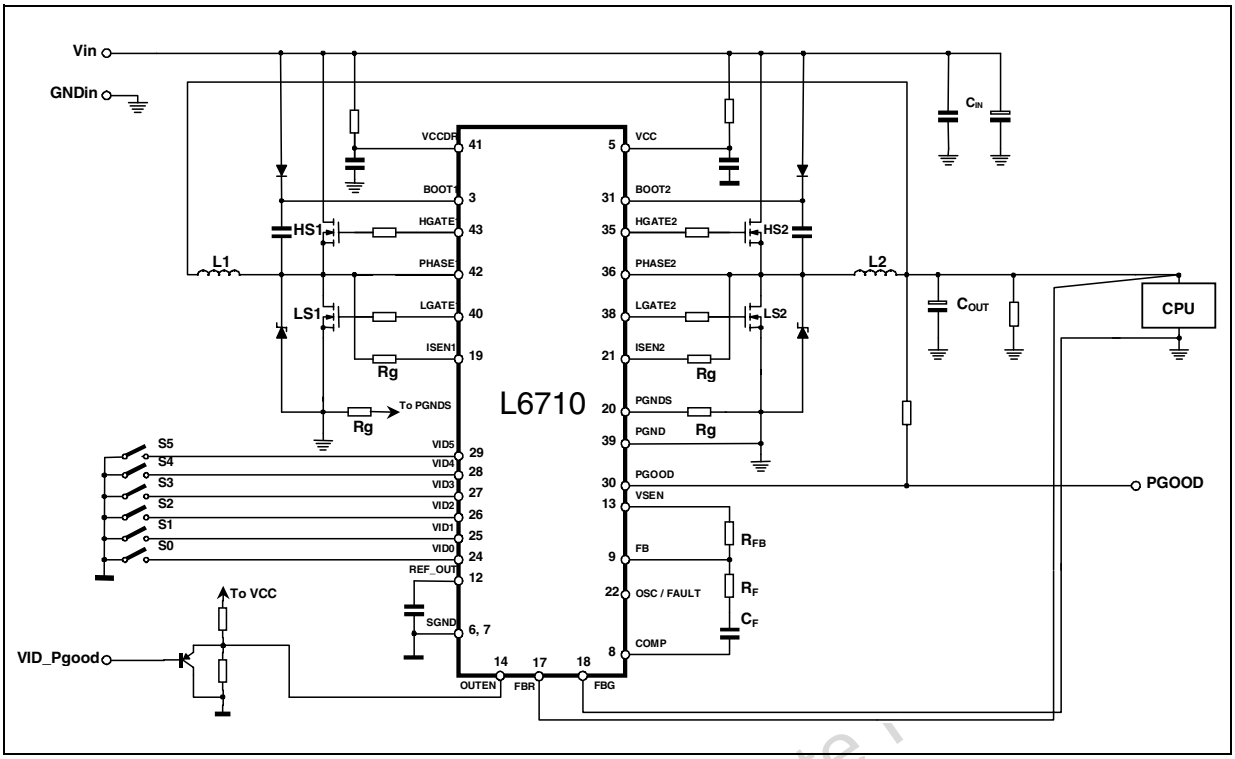

DEVICE DESCRIPTION

The device is an integrated circuit realized in BCD technology. It provides complete control logic and protections for a high performance dual-phase step-down DC-DC converter optimized for microprocessor power supply. It is designed to drive N Channel MOSFETs in a two-phase synchronous-rectified buck topology. A 180 deg phase shift is provided between the two phases allowing reduction in the input capacitor current ripple, reducing also the size and the losses.

The output voltage of the converter can be precisely regulated, programming the VID pins, from 0.8375 to 1.6000V with 12.5mV binary steps, with a maximum tolerance on the output regulated voltage of ±0.5% over temperature and line voltage variations. Since the VID pins program the maximum output voltage, the device automatically regulates to a voltage VID*=VID-25mV avoiding use of any external component to lower the regulated voltage. Dynamic VID Code changes are managed stepping to the new configuration following the VID table with no need for external components. The device provides an average current-mode control with fast transient response. It includes a 150kHz oscillator externally adjustable through a resistor. The error amplifier features a 15V/µs slew rate that permits high converter bandwidth for fast transient performances.

Current information is read across the lower mosfets R_{dsON} or across a sense resistor placed in series to the LS mos in fully differential mode. The current information corrects the PWM output in order to equalize the average current carried by each phase. Current sharing between the two phases is then limited at ±10% over static and dynamic conditions unless considering the sensing element spread.

The device protects against Over-Current, with an OC threshold for each phase, entering in constant current mode. Since the current is read across the low side mosfets, the device keeps constant the bottom of the inductors current triangular waveform. When an under voltage is detected the device latches and the FAULT pin is driven high. The device performs also Over-Voltage protection that disables immediately the device turning ON the lower driver and driving high the FAULT pin.

Obsolete Product(s) - Obsolete

OSCILLATOR

The switching frequency is internally fixed at 150kHz. Each phase works at the frequency fixed by the oscillator so that the resulting switching frequency at the load side results in being doubled.

The internal oscillator generates the triangular waveform for the PWM charging and discharging with a constant current an internal capacitor. The current delivered to the oscillator is typically 25µA (Fsw=150kHz) and may be varied using an external resistor (R_{OSC}) connected between OSC pin and GND or Vcc. Since the OSC pin is maintained at fixed voltage (Typ. 1.237V), the frequency is varied proportionally to the current sunk (forced) from (into) the pin considering the internal gain of 6KHz/µA.

In particular connecting it to GND the frequency is increased (current is sunk from the pin), while connecting R_{OSC} to Vcc=12V the frequency is reduced (current is forced into the pin), according to the following relationships:

$$\text{ROSC vs. GND:}\quad f_S = 150\text{KHz} + \frac{1.237}{R_{OSC}} \cdot 6\frac{\text{kHz}}{\mu\text{A}} = 150\text{kHz} + \frac{7.422 \cdot 10^6}{R_{OSC}(\text{K}\Omega)}$$

$$\text{ROSC vs. 12V:}\quad f_S = 150\text{KHz} + \frac{12-1.237}{R_{OSC}} \cdot 6\frac{\text{kHz}}{\mu\text{A}} = 150\text{kHz} + \frac{6.457 \cdot 10^7}{R_{OSC}(\text{K}\Omega)}$$

Note that forcing 25µA into this pin, the device stops switching because no current is delivered to the oscillator.

Figure 1. R_{OSC} vs. Switching Frequency

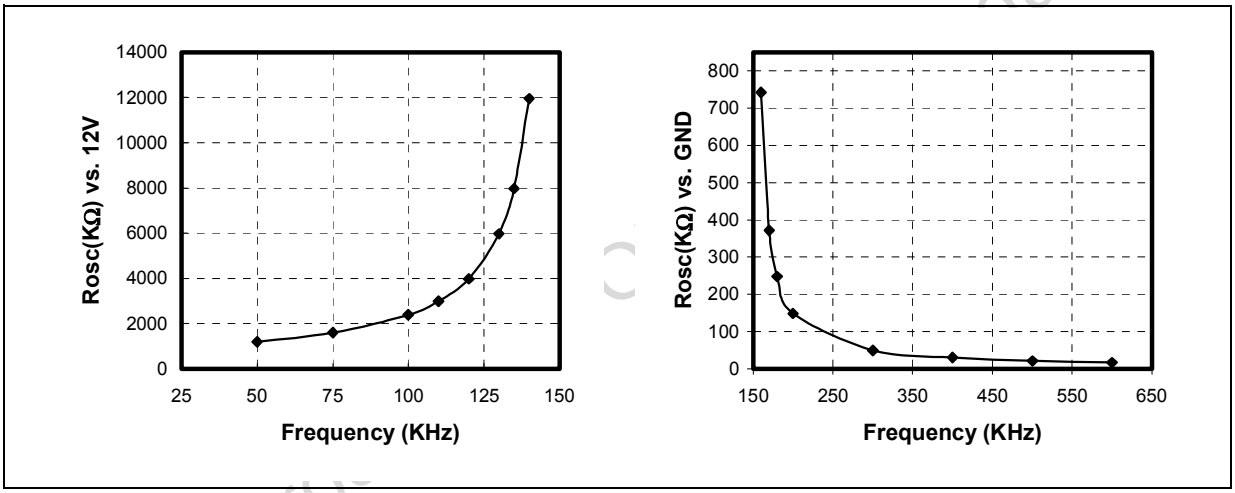

DIGITAL TO ANALOG CONVERTER AND REFERENCE

The built-in digital to analog converter allows the adjustment of the output voltage from 0.8375V to 1.6000V with 12.5mV as shown in the previous table 1 automatically regulating VID* = VID - 25mV in order to avoid any external component or circuitry to lower the regulated voltage meeting VRD10 specs. The internal reference is trimmed to ensure the output voltage precision of ±0.5% and a zero temperature coefficient around 70°C. The internal reference voltage for the regulation is programmed by the voltage identification (VID) pins. These are inputs of an internal DAC that is realized by means of a series of resistors providing a partition of the internal voltage reference. The VID code drives a multiplexer that selects a voltage on a precise point of the divider. The DAC output is delivered to an amplifier obtaining the V_{PROG} voltage reference (i.e. the set-point of the error amplifier). Internal pull-ups are provided (realized with a 5µA current generator up to 3V Typ); in this way, to program a logic "1" it is enough to leave the pin floating, while to program a logic "0" it is enough to short the pin to GND. Programming the "11111x" code (VID5 doesn't matter), the device enters the NOCPU mode: all mosfets are turned OFF.

The voltage identification (VID*) pin configuration also sets the power-good thresholds (PGOOD) and the Over / Under Voltage protection (OVP/UVP) thresholds.

The reference used for the regulation is also available externally on the pin REF_OUT; this pin must be filtered vs. SGND with 47nF (typ.) ceramic capacitor to allow compatibility with VRD10.0 that is to allow dynamic VID transitions that causes reference variations of 12.5mV / 5 µSec.

DYNAMIC VID TRANSITION

The device is able to manage Dynamic VID Code changes that allow Output Voltage modification during normal device operation. The device checks on the clock rising and falling edge for VID code modifications. Once the new code is stable for at least one sample interval (half clock cycle) the reference steps up or down in 12.5mV increments every clock cycle until the new VID code is reached. During the transition, VID code changes are ignored; the device re-starts monitoring VID after the transition has finished.

PGOOD, OVP and UVP signals are masked during the transition and are re-activated after the transition has finished.

DRIVER SECTION

The integrated high-current drivers allow using different types of power MOS (also multiple MOS to reduce the R_{dsON}), maintaining fast switching transition.

The drivers for the high-side mosfets use BOOTx pins for supply and PHASEx pins for return. The drivers for the low-side mosfets use VCCDRV pin for supply and PGND pin for return. A minimum voltage of 4.6V at VCCDRV pin is required to start operations of the device.

The controller embodies a sophisticated anti-shoot-through system to minimize low side body diode conduction time maintaining good efficiency saving the use of Schottky diodes. The dead time is reduced to few nanoseconds assuring that high-side and low-side mosfets are never switched on simultaneously: when the high-side mosfet turns off, the voltage on its source begins to fall; when the voltage reaches 2V, the low-side mosfet gate drive is applied with 30ns delay.

When the low-side mosfet turns off, the voltage at LGATEx pin is sensed. When it drops below 1V, the high-side mosfet gate drive is applied with a delay of 30ns. If the current flowing in the inductor is negative, the source of high-side mosfet will never drop. To allow the turning on of the low-side mosfet even in this case, a watchdog controller is enabled: if the source of the high-side mosfet don't drop for more than 240ns, the low side mosfet is switched on so allowing the negative current of the inductor to recirculate. This mechanism allows the system to regulate even if the current is negative.

The BOOTx and VCCDR pins are separated from IC's power supply (VCC pin) as well as signal ground (SGND pin) and power ground (PGND pin) in order to maximize the switching noise immunity. The separated supply for the different drivers gives high flexibility in mosfet choice, allowing the use of logic-level mosfet. Several combination of supply can be chosen to optimize performance and efficiency of the application. Power conversion is also flexible; 5V or 12V bus can be chosen freely.

The peak current is shown for both the upper and the lower driver of the two phases in figure 2. A 10nF capacitive load has been used. For the upper drivers, the source current is 1.9A while the sink current is 1.5A with V_{BOOT} -V_{PHASE} = 12V; similarly, for the lower drivers, the source current is 2.4A while the sink current is 2A with VCCDR = 12V.

Obsolete Product(s) - Obsolete Product(s)

Figure 2. Drivers peak current: High Side (left) and Low Side (right).

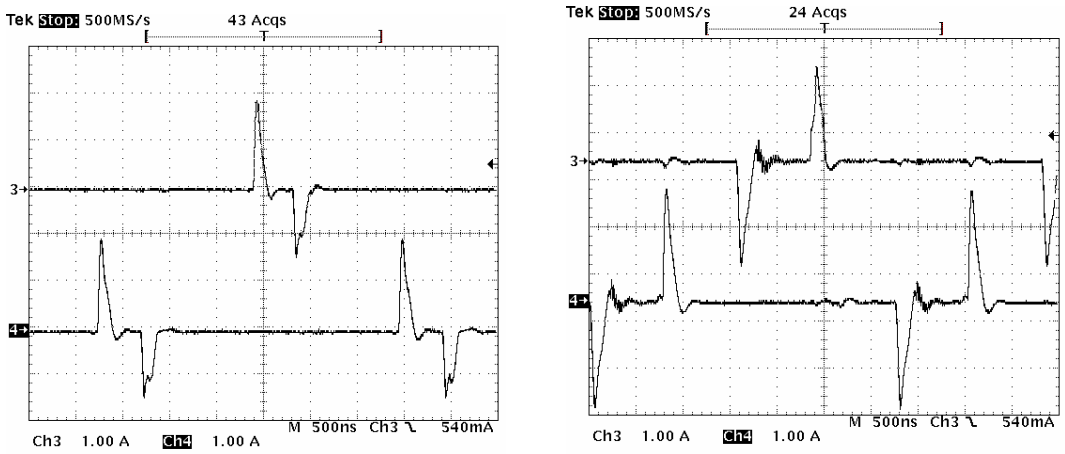

CH3 = HGATE1; CH4 = HGATE2 **CH3 = LGATE1; CH4 = LGATE2**

Obsolete Product(s) - Obsolete Product(s)

CURRENT READING AND OVER CURRENT

The current flowing trough each phase is read using the voltage drop across the low side mosfets R_{dsON} or across a sense resistor (R_{SENSE}) and internally converted into a current. The transconductance ratio is issued by the external resistor Rg placed outside the chip between ISENx and PGNDS pins toward the reading points.

The differential current reading rejects noise and allows to place sensing element in different locations without affecting the measurement's accuracy. The current reading circuitry reads the current during the time in which the low-side mosfet is on (OFF Time). During this time, the reaction keeps the pin ISENx and PGNDS at the same voltage while during the time in which the reading circuitry is off, an internal clamp keeps these two pins at the same voltage sinking from the ISENx pin the necessary current (Needed if low-side mosfet R_{dsON} sense is implemented to avoid absolute maximum rating overcome on ISENx pin).

The proprietary current reading circuit allows a very precise and high bandwidth reading for both positive and negative current. This circuit reproduces the current flowing through the sensing element using a high speed Track & Hold transconductance amplifier. In particular, it reads the current during the second half of the OFF time reducing noise injection into the device due to the mosfet turn-on (See fig. 3). Track time must be at least 200ns to make proper reading of the delivered current.

This circuit sources a constant 100µA current from the PGNDS pin: it must be connected through two equal Rg resistors to the groundside of the sensing element (See Figure 3). The two current reading circuitry uses this pin as a reference keeping the ISENx pin to this voltage.

The current that flows in the ISENx pin is then given by the following equation:

$$I_{ISENx} = 50\mu A + \frac{R_{SENSE} \cdot I_{PHASEx}}{R_g} = 50\mu A + I_{INFOx}$$

Where R_{SENSE} is an external sense resistor or the R_{dsON} of the low side mosfet and Rg is the transconductance resistor used between ISENx and PGNDS pins toward the reading points; I_{PHASEx} is the current carried by the relative phase. The current information reproduced internally is represented by the second term of the previous equation as follow:

$$I_{INFOx} = \frac{R_{SENSE} \cdot I_{PHASEx}}{R_g}$$

Since the current is read in differential mode, also negative current information is kept; this allow the device to check for dangerous returning current between the two phases assuring the complete equalization between the phase's currents. From the current information of each phase, information about the total current delivered ($I_{FB} = I_{INFO1} + I_{INFO2}$) and the average current for each phase ($I_{AVG} = (I_{INFO1} + I_{INFO2})/2$) is taken. I_{INFOX} is then compared to I_{AVG} to give the correction to the PWM output in order to equalize the current carried by the two phases.

The transconductance resistor Rg can be designed in order to have current information of 25µA per phase at full nominal load; the over current intervention threshold is set at 140% of the nominal (I_{INFOx} = 35µA). According to the above relationship, the over current threshold (I_{OCPx}) for each phase, which has to be placed at 1/2 of the total delivered maximum current, results:

$$I_{OCPx} = \frac{35\mu A \cdot Rg}{R_{SENSE}} \qquad Rg = \frac{I_{OCPx} \cdot R_{SENSE}}{35\mu A}$$

Since the device senses the output current across the low-side mosfets (or across a sense resistors in series with them) the device limits the bottom of the inductor current triangular waveform: an over current is detected when the current flowing into the sense element is greater than I_{OCPx} (I_{INFOx}>35µA).

Introducing now the maximum ON time dependence with the delivered current (where T is the switching period $T=1/F_{SW}$):

$$T_{ON,MAX} = (0.80 - I_{FB} \cdot 5.73k) \cdot T = \left(0.80 - \frac{R_{SENSE}}{Rg} \cdot I_{OUT} \cdot 5.73k\right) \cdot T = \begin{cases} T = 0.80 \cdot T & I_{FB} = 0\mu A \\ T = 0.40 \cdot T & I_{FB} = 70\mu A \end{cases}$$

Where I_{OUT} is the output current.

This linear dependence has a value at zero load of 0.80·T and at maximum current of 0.40·T typical and results in two different behaviors of the device:

Figure 3. Current reading timing (left) and circuit (right)

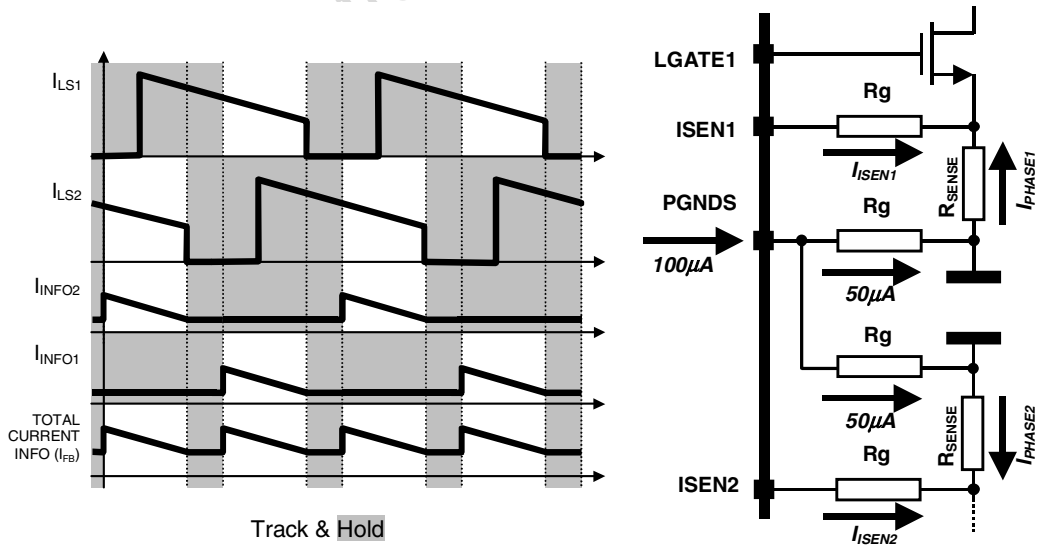

Obsolete Product(s) - Obsolete Product(s)

1. T_{ON} LIMITED OUTPUT VOLTAGE.

This happens when the maximum ON time is reached before the current in each phase reaches I_{OCPx} (I_{INFOx}<35 A).

Figure 4a shows the maximum output voltage that the device is able to regulate considering the T_{ON} limitation imposed by the previous relationship. If the desired output characteristic crosses the T_{ON} limited maximum output voltage, the output resulting voltage will start to drop after crossing. In this case, the device doesn't perform constant current limitation but only limits the maximum ON time following the previous relationship. The output voltage follows the resulting characteristic (dotted in Figure 4b) until UVP is detected or anyway until I_{FB} = 70 µA

Figure 4. T_{ON} Limited Operation

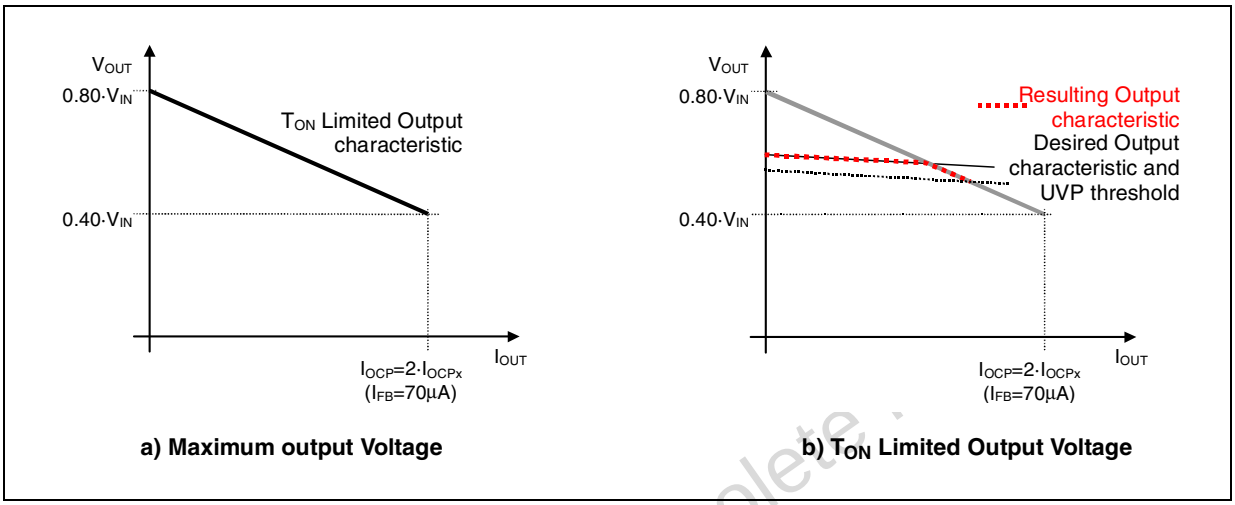

2. CONSTANT CURRENT OPERATION

This happens when ON time limitation is reached after the current in each phase reaches I_{OCPx} (I_{INFOx} >35µA).

The device enters in Quasi-Constant-Current operation: the low-side mosfets stays ON until the current read becomes lower than I_{OCPx} (I_{INFOx} < 35µA) skipping clock cycles. The high side mosfets can be turned ON with a T_{ON} imposed by the control loop at the next available clock cycle and the device works in the usual way until another OCP event is detected.

This means that the average current delivered can slightly increase also in Over Current condition since the current ripple increases. In fact, the ON time increases due to the OFF time rise because of the current has to reach the I_{OCPx} bottom. The worst-case condition is when the ON time reaches its maximum value.

When this happens, the device works in Constant Current and the output voltage decrease as the load increase. Crossing the UVP threshold causes the device to latch (FAULT pin is driven high).

Figure 5 shows this working condition.

It can be observed that the peak current (Ipeak) is greater than the IOCPx but it can be determined as follow:

$$I_{peak} = I_{OCPx} + \frac{V_{IN} - Vout_{min}}{L} \cdot Ton_{MAX} = I_{OCPx} + \frac{V_{IN} - Vout_{MIN}}{L} \cdot 0.40 \cdot T$$

Where V_{outMIN} is the minimum output voltage (VID-40% as follow).

The device works in Constant-Current, and the output voltage decreases as the load increase, until the

Obsolete Product(s) - Obsolete

output voltage reaches the under-voltage threshold (V_{outMIN}). When this threshold is crossed, all mosfets are turned off, the FAULT pin is driven high and the device stops working. Cycle the power supply to re-start operation.

The maximum average current during the Constant-Current behavior results:

$$I_{MAX,TOT} = 2 \cdot I_{MAX} = 2 \cdot \left(I_{OCPx} + \frac{Ipeak - I_{OCPx}}{2} \right)$$

In this particular situation, the switching frequency results reduced. The ON time is the maximum allowed (TonMAX) while the OFF time depends on the application:

$$T_{OFF} = L \cdot \frac{Ipeak - I_{OCPx}}{V_{OUt}} \qquad f = \frac{1}{T_{ONmax} + T_{OFF}}$$

Over current is set anyway when I_{INFOx} reaches 35µA (I_{FB}=70µA).

The full load value is only a convention to work with convenient values for I_{FB}. Since the OCP intervention threshold is fixed, to modify the percentage with respect to the load value, it can be simply considered that, for example, to have on OCP threshold of 200%, this will correspond to I_{INFOx} = 35µA (I_{FB} = 70µA). The full load current will then correspond to I_{INFOx} = 17.5µA (I_{FB} = 35µA).

Figure 5. Constant Current operation

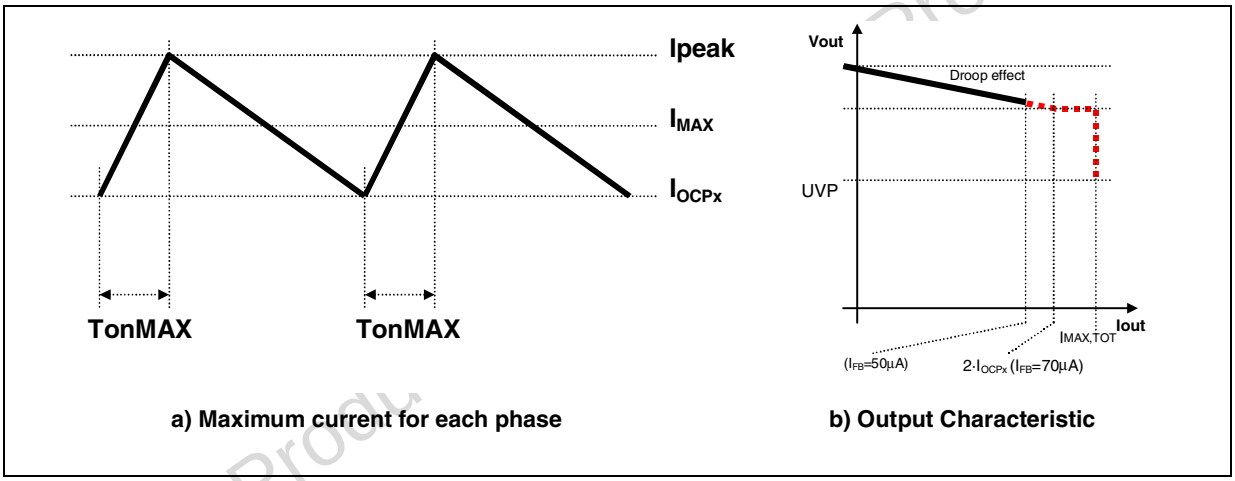

a) Maximum current for each phase

b) Output Characteristic

INTEGRATED DROOP FUNCTION

The device uses a droop function to satisfy the requirements of high performance microprocessors, reducing the size and the cost of the output capacitor.

This method "recovers" part of the drop due to the output capacitor ESR in the load transient, introducing a dependence of the output voltage on the load current: the regulated voltage decrease as the load increase with a precise relationship.

As shown in figure 6, the ESR drop is present in any case, but using the droop function the total deviation of the output voltage is minimized. A static error (V_{DROOP} in figure 6) at zero load is simply introduced by a resistor between FB and GND allowing to exploit the all tolerance interval available. This additional resistor is not required in application such as VRD10 since the nominal value is already set by the VID* and the load regulation fixed by the specs.

Since the device has an average current mode regulation, the information about the total current delivered

Obsolete Product(s)

is used to implement the Droop Function. This current I_{FB} (equal to the sum of both I_{INFOx}) is sourced from the FB pin. Connecting a resistor between this pin and Vout, the total current information flows only in this resistor because the compensation network between FB and COMP has always a capacitor in series (See fig. 7). The voltage regulated is then equal to:

$$V_{OUT} = VID^{*} - R_{FB} \cdot I_{FB}$$

Since I_{FB} depends on the current information about the two phases, the output characteristic vs. load current is given by:

$$V_{OUT} = VID^{*} - R_{DROOP} \cdot I_{LOAD} = VID^{*} - R_{FB} \cdot \frac{R_{SENSE}}{Rg} \cdot I_{LOAD}$$

Where I_{LOAD} is the output current of the system and R_{DROOP} is its equivalent output resistance.

The feedback current is equal to 50µA at nominal full load ($I_{FB} = I_{INFO1} + I_{INFO2}$) and 70µA at the OC intervention threshold, so the maximum output voltage deviation is equal to:

$$\Delta V_{FULL-POSITIVE-LOAD} = -R_{FB} \cdot 50\mu A \qquad \Delta V_{OC-INTERVENTION} = -R_{FB} \cdot 70\mu A$$

Figure 6. Output transient response without (a) and with (b) the droop function

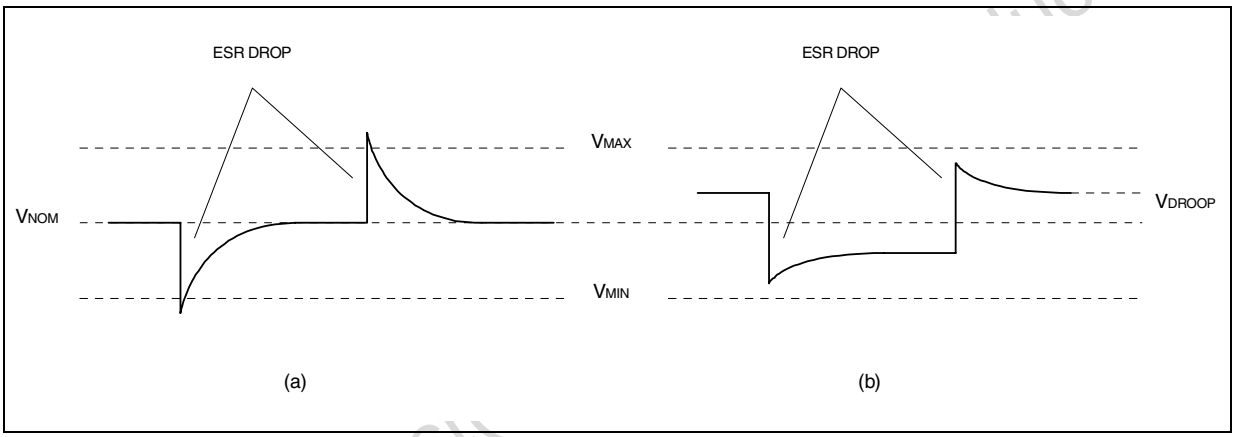

Figure 7. Active Droop Function Circuit

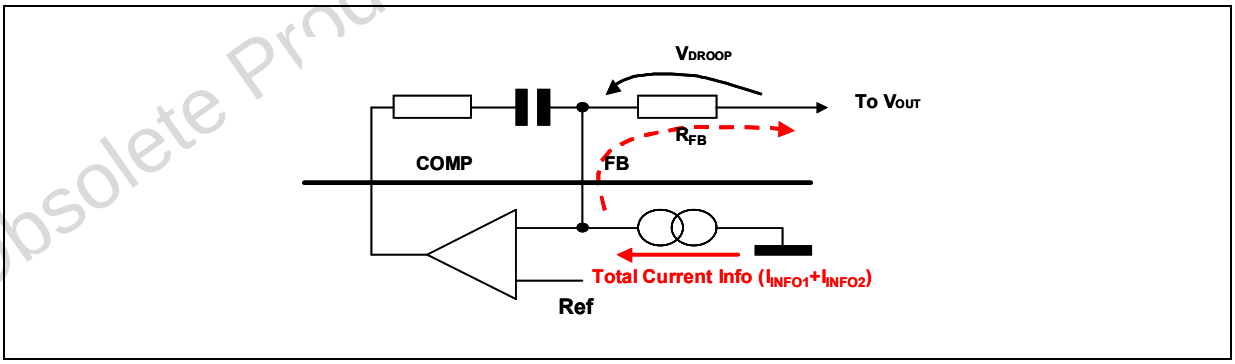

REMOTE VOLTAGE SENSE

A remote sense buffer is integrated into the device to allow output voltage remote sense implementation without any additional external components. In this way, the output voltage programmed is regulated between the remote buffer inputs compensating motherboard trace losses or connector losses if the device

is used for a VRM module. The very low offset amplifier senses the output voltage remotely through the pins FBR and FBG (FBR is for the regulated voltage sense while FBG is for the ground sense) and reports this voltage internally at VSEN pin with unity gain eliminating the errors. Keeping the FBR and FBG traces parallel and guarded by a power plane results in common mode coupling for any picked-up noise.

If remote sense is not required, it is enough connecting R_{FB} directly to the regulated voltage: VSEN becomes not connected and still senses the output voltage through the remote buffer. In this case the FBG and FBR pins must be connected anyway to the regulated voltage (See figure 9).

The remote buffer is included in the trimming chain in order to achieve ±0.5% accuracy on the output voltage when the RB Is used: eliminating it from the control loop causes the regulation error to be increased by the RB offset worsening the device performances.

Figure 8. Remote Buffer Connections

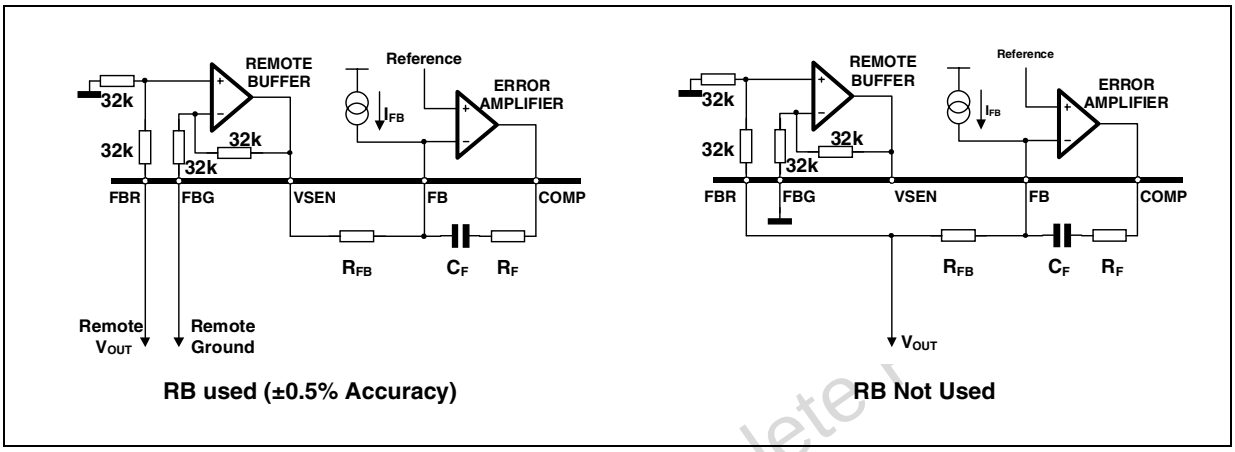

OUTPUT VOLTAGE MONITOR PROTECTION

The device monitors through pin VSEN the regulated voltage in order to build the PGOOD signal and manage the OVP / UVP conditions comparing this voltage level with the programmed reference VID*.

Power good output is forced low if the voltage sensed by VSEN is not within ±12% (Typ.) of the programmed value. It is an open drain output and it is enabled only after the soft start is finished (2048 clock cycles after start-up). During Soft-Start this pin is forced low.

Under voltage protection is provided. If the output voltage monitored by VSEN drops below the 60% of the reference voltage for more than one clock period, the device turns off all mosfets and the OSC/FAULT is driven high (5V). The condition is latched, to recover it is required to cycle the power supply.

Over Voltage protection is also provided:

Once VCC crosses the turn-ON threshold, when the voltage monitored by VSEN reaches 125% (Typ.) of the programmed voltage the controller permanently switches on both the low-side mosfets and switches off both the high-side mosfets in order to protect the CPU. The OSC/ FAULT pin is driven high (5V) and power supply (Vcc) turn off and on is required to restart operations.

Both Over Voltage and Under Voltage are active also during soft start (Under Voltage after than the output voltage reaches 0.6V). The reference used in this case to determine the UV thresholds is the increasing voltage driven by the 2048 soft start digital counter while the reference used for the OV threshold is the final reference programmed by the VID pins.

Obsolete Product(s) - Obsolete !

Figure 9. OVP (left) and UVP (right) latch.

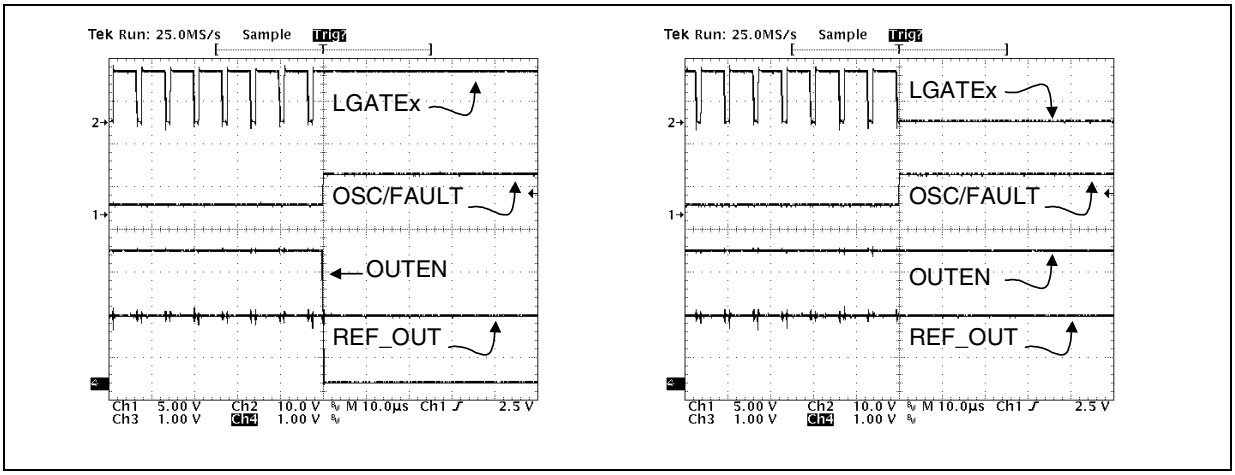

SOFT START, INHIBIT AND POWER DOWN

At start-up a ramp is generated increasing the loop reference from 0V to the final value programmed by VID in 2048 clock periods as shown in figure 10.

Once the soft start begins, the reference is increased: upper and lower MOS begin to switch and the output voltage starts to increase with closed loop regulation. At the end of the digital soft start, the Power Good comparator is enabled and the PGOOD signal is then driven high (See fig. 10). The Under Voltage comparator is enabled when the reference voltage reaches 0.6V. The Soft-Start will not take place, if both VCC and VCCDR pins are not above their own turn-on thresholds.

During normal operation, if any under-voltage is detected on one of the two supplies the device shuts down. Forcing the OUTEN pin to a voltage lower than 0.4V (Typ.) disables the device: all the power mosfets and protections are turned off until the condition is removed.

Figure 10. Soft Start

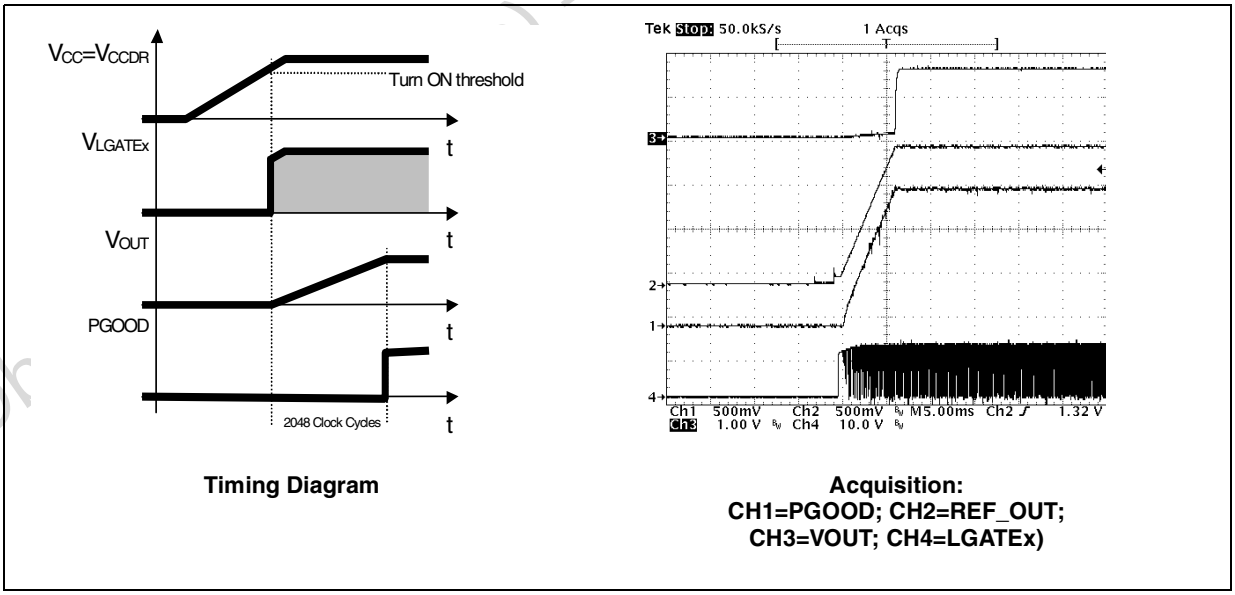

Timing Diagram

Acquisition:
CH1=PGOOD; CH2=REF_OUT;
CH3=VOUT; CH4=LGATEx)

Obsolete Product(s)

Figure 11. Power Down: 0A (left), resistive load (right); CH1= Vout; CH2,CH3 = LS; CH4 =V in

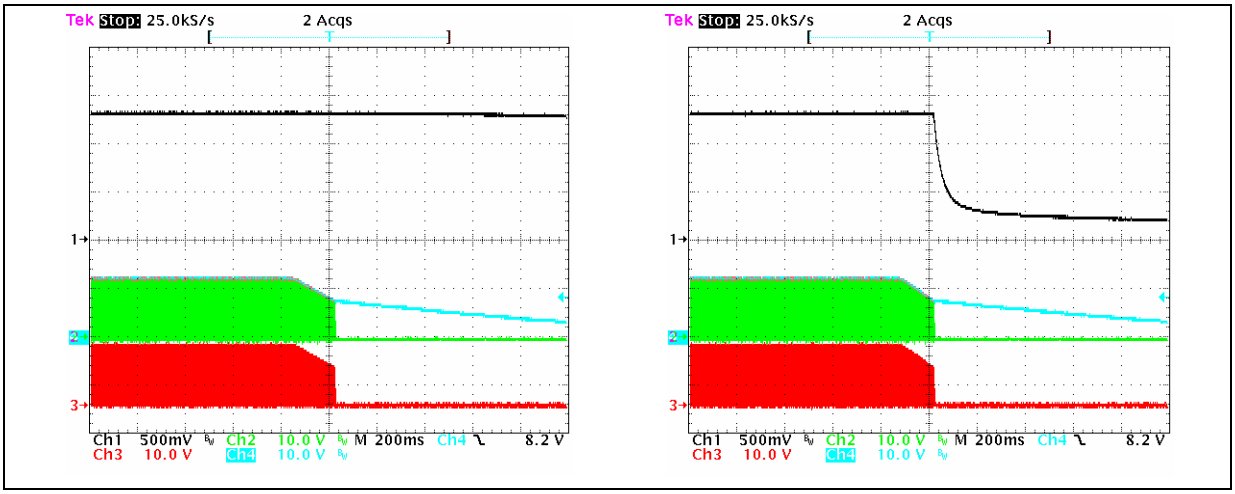

When shutting the system down, the device continues regulating until Vcc becomes lower than the turn-off threshold. After that point, the device will shut down all power mosfets.

INPUT CAPACITOR

The input capacitor is designed considering mainly the input RMS current that depends on the duty cycle as reported in figure 12. Considering the dual-phase topology, the input RMS current is highly reduced comparing with a single-phase operation. It can be observed that the input RMS value is one half of the single-phase equivalent input current in the worst case condition that happens for D=0.25 and D=0.75.

The power dissipated by the input capacitance is then equal to:

$$P_{RMS} = ESR \cdot (I_{RMS})^2$$

Input capacitor is designed in order to sustain the ripple relative to the maximum load duty cycle. To reach the high RMS value needed by the CPU power supply application and also to minimize components cost, the input capacitance is realized by more than one physical capacitor. The equivalent RMS current is simply the sum of the single capacitor's RMS current.

Figure 12. Input RMS Current vs. Duty Cycle (D) and Driving Relationships.

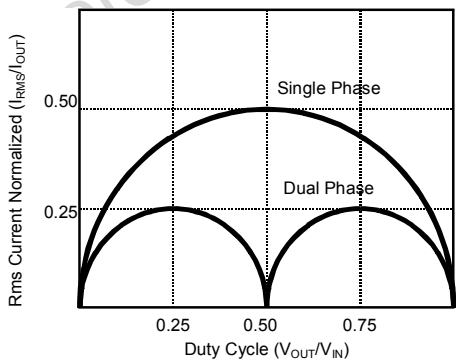

$$I_{rms} = \begin{bmatrix} \frac{I_{OUT}}{2} \cdot \sqrt{2D \cdot (1-2D)} & \text{if} & D < 0.5 \\ \frac{I_{OUT}}{2} \cdot \sqrt{(2D-1) \cdot (2-2D)} & \text{if} & D > 0.5 \end{bmatrix}$$

Where $D = V_{OUT}/V_{IN}$
is the operative duty cycle for each phase

Obsolete Product(s) - Obsolete Product(s)

Input bulk capacitor must be equally divided between high-side drain mosfets and placed as close as possible to reduce switching noise above all during load transient. Ceramic capacitor can also introduce benefits in high frequency noise decoupling, noise generated by parasitic components along power path.

OUTPUT CAPACITOR

Since the microprocessors require a current variation beyond 50A doing load transients, with a slope in the range of tenth A/µs, the output capacitor is a basic component for the fast response of the power supply.

Dual phase topology reduces the amount of output capacitance needed because of faster load transient response (switching frequency is doubled at the load connections). Current ripple cancellation due to the 180° phase shift between the two phases also reduces requirements on the output ESR to sustain a specified voltage ripple.
When a load transient is applied to the converter's output, for first few microseconds the current to the load is supplied by the output capacitors. The controller recognizes immediately the load transient and increases the duty cycle, but the current slope is limited by the inductor value.

The output voltage has a first drop due to the current variation inside the capacitor (neglecting the effect of the ESL):

$$\Delta V_{OUT} = \Delta I_{OUT} \cdot ESR$$

A minimum capacitor value is required to sustain the current during the load transient without discharge it. The voltage drop due to the output capacitor discharge is given by the following equation:

$$\Delta V_{OUT} = \frac{\Delta I^2_{OUT} \cdot L}{4 \cdot C_{OUT} \cdot (V_{In} \cdot d_{max} - V_{OUT})}$$

Where D_{MAX} is the maximum duty cycle value. The lower is the ESR, the lower is the output drop during load transient and the lower is the output voltage static ripple.

INDUCTOR DESIGN

The inductance value is defined by a compromise between the transient response time, the efficiency, the cost and the size. The inductor has to be calculated to sustain the output and the input voltage variation to maintain the ripple current ΔI_L between 20% and 30% of the maximum output current. The inductance value can be calculated with this relationship:

$$L = \frac{V_{IN} - V_{OUT}}{fs \cdot \Delta I_L} \cdot \frac{V_{OUT}}{V_{IN}}$$

Where F_{SW} is the switching frequency, V_{IN} is the input voltage and V_{OUT} is the output voltage.

Increasing the value of the inductance reduces the ripple current but, at the same time, reduces the converter response time to a load transient. The response time is the time required by the inductor to change its current from initial to final value. Since the inductor has not finished its charging time, the output current is supplied by the output capacitors. Minimizing the response time can minimize the output capacitance required.
The response time to a load transient is different for the application or the removal of the load: if during the application of the load the inductor is charged by a voltage equal to the difference between the input and the output voltage, during the removal it is discharged only by the output voltage. The following expressions give approximate response time for I load transient in case of enough fast compensation network response:

Obsolete Product(s) - Obsolete Product(s)

$$t_{application} = \frac{L \cdot \Delta I}{V_{IN} - V_{OUT}} \qquad t_{removal} = \frac{L \cdot \Delta I}{V_{OUT}}$$

The worst condition depends on the input voltage available and the output voltage selected. Anyway the worst case is the response time after removal of the load with the minimum output voltage programmed and the maximum input voltage available.

MAIN CONTROL LOOP

The control loop is composed by the Current Sharing control loop and the Average Current Mode control loop. Each loop gives, with a proper gain, the correction to the PWM in order to minimize the error in its regulation: the Current Sharing control loop equalize the currents in the inductors while the Average Current Mode control loop fixes the output voltage equal to the reference programmed by VID. Figure 13 reports the block diagram of the main control loop.

Figure 13. Main Control Loop Diagram

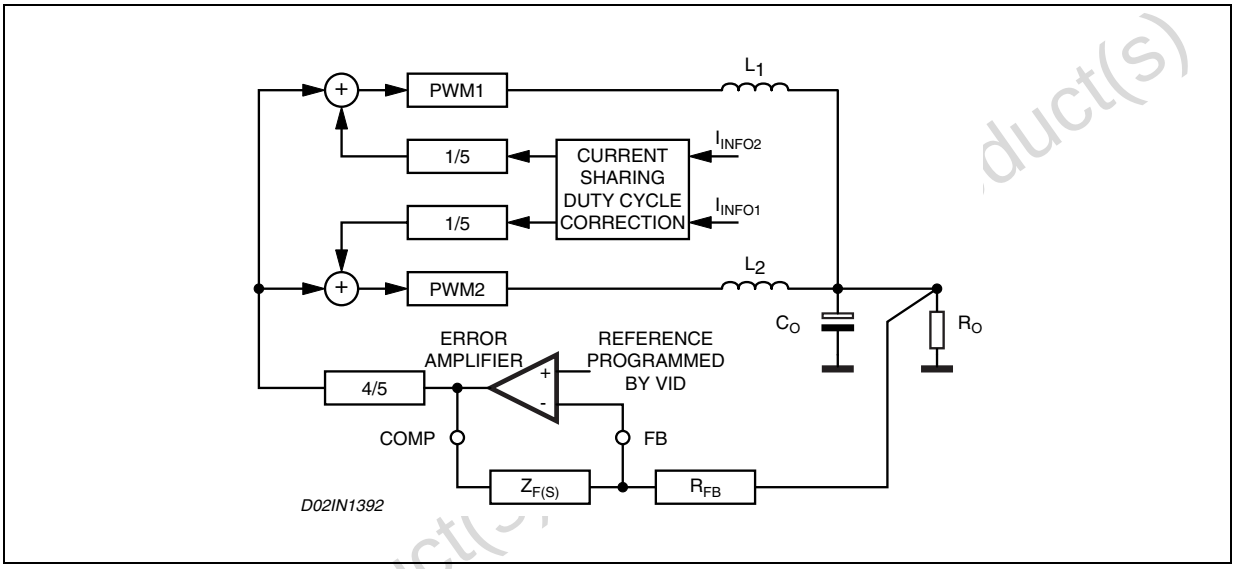

Current Sharing (CS) Control Loop

Active current sharing is implemented using the information from Tran conductance differential amplifier in an average current mode control scheme.

A current reference equal to the average of the read current (I_{AVG}) is internally built; the error between the read current and this reference is converted to a voltage with a proper gain and it is used to adjust the duty cycle whose dominant value is set by the error amplifier at COMP pin (See fig. 14).

The current sharing control is a high bandwidth control loop allowing current sharing even during load transients.

The current sharing error is affected by the choice of external components; choose precise Rg resistor (±1% is necessary) to sense the current.

The current sharing error is internally dominated by the voltage offset of Tran conductance differential amplifier; considering a voltage offset equal to 2mV across the sense resistor, the current reading error is given by the following equation

$$\frac{\Delta I_{READ}}{I_{MAX}} = \frac{2mV}{R_{SENSE} \cdot I_{MAX}}$$

Figure 14. Current Sharing Control Loop.

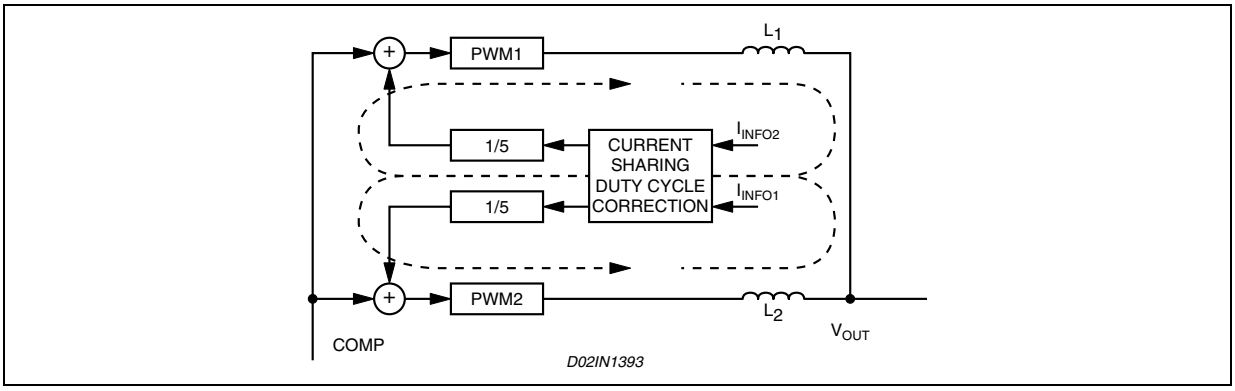

Where ΔI_{READ} is the difference between one phase current and the ideal current ($I_{MAX}/2$).

For Rsense=4mΩ and Imax=40A the current sharing error is equal to 2.5%, neglecting errors due to Rg and Rsense mismatches.

Average Current Mode (ACM) Control Loop

The average current mode control loop is reported in figure 15. The current information IFB sourced by the FB pin flows into RFB implementing the dependence of the output voltage from the read current.

The ACM control loop gain results (obtained opening the loop after the COMP pin)

$$G_{LOOP}(s)) = -\frac{PWM \cdot Z_F(s) \cdot (R_{DROOP} + Z_P(s))}{(Z_P(s) + Z_L(s)) \cdot \left[\frac{Z_F(s)}{A(s)} + \left(1 + \frac{1}{A(s)}\right) \cdot R_{FB}\right]}$$

Where:

- $R_{DROOP} = \frac{Rsense}{Rg} \cdot R_{FB}$ is the equivalent output resistance determined by the droop function;
- $Z_P(s)$ is the impedance resulting by the parallel of the output capacitor (and its ESR) and the applied load Ro;
- $Z_F(s)$ is the compensation network impedance;
- $Z_L(s)$ is the parallel of the two inductor impedance;
- A(s) is the error amplifier gain;
- $PWM = \frac{4}{5} \cdot \frac{V_{IN}}{\Delta V_{OSC}}$ is the ACM PWM transfer function where Vosc is the oscillator ramp amplitude and has a typical value of 3V

Removing the dependence from the Error Amplifier gain, so assuming this gain high enough, the control loop gain results:

$$G_{LOOP}(s) = -\frac{4}{5} \cdot \frac{V_{IN}}{\Delta V_{OSC}} \cdot \frac{Z_F(s)}{Z_P(s) + Z_L(s)} \cdot \left(\frac{Rs}{Rg} + \frac{Z_P(s)}{R_{FB}}\right)$$

With further simplifications, it results:

$$G_{LOOP}(s) = -\frac{4}{5} \cdot \frac{V_{IN}}{\Delta V_{OSC}} \cdot \frac{Z_F(s)}{R_{FB}} \cdot \frac{Ro + R_{DROOP}}{Ro + \frac{R_L}{2}} \quad \frac{1 + s \cdot Co \cdot (R_{DROOP}//Ro + ESR)}{s^2 \cdot Co \cdot \frac{L}{2} + s \cdot \left[\frac{L}{2 \cdot Ro} + Co \cdot ESR + Co \cdot \frac{R_L}{2}\right] + 1}$$

Obsolete Product(s) - Obsolete Product(s)

Considering now that in the application of interest it can be assumed that Ro>>R_L; ESR<<Ro and R_{DROOP}<<Ro, it results:

$$G_{LOOP}(s) = -\frac{4}{5}\cdot\frac{V_{IN}}{\Delta V_{OSC}}\cdot\frac{Z_F(s)}{R_{FB}}\cdot\frac{1+s\cdot Co\cdot(R_{DROOP}+ESR)}{s^2\cdot Co\cdot\frac{L}{2}+s\cdot\left[\frac{L}{2\cdot Ro}+Co\cdot ESR+Co\cdot\frac{R_L}{2}\right]+1}$$

The ACM control loop gain is designed to obtain a high DC gain to minimize static error and cross the 0dB axes with a constant -20dB/dec slope with the desired crossover frequency ω_T. Neglecting the effect of $Z_F(s)$, the transfer function has one zero and two poles. Both the poles are fixed once the output filter is designed and the zero is fixed by ESR and the Droop resistance. To obtain the desired shape an R_F-C_F series network is considered for the $Z_F(s)$ implementation. A zero at $\omega_F=1/R_FC_F$ is then introduced together with an integrator. This integrator minimizes the static error while placing the zero in correspondence with the L-C resonance a simple -20dB/dec shape of the gain is assured (See Figure 15). In fact, considering the usual value for the output filter, the LC resonance results to be at frequency lower than the above reported zero.

Compensation network can be simply designed placing $\omega_Z=\omega_{LC}$ and imposing the cross-over frequency T as desired obtaining:

$$R_F = \frac{R_{FB}\cdot\Delta V_{OSC}}{V_{IN}}\cdot\frac{5}{4}\cdot\omega_T\cdot\frac{L}{2\cdot(R_{DROOP}+ESR)} \qquad C_F = \frac{\sqrt{Co\cdot\frac{L}{2}}}{R_F}$$

Figure 15. ACM Control Loop Gain Block Diagram (left) and Bode Diagram (right).

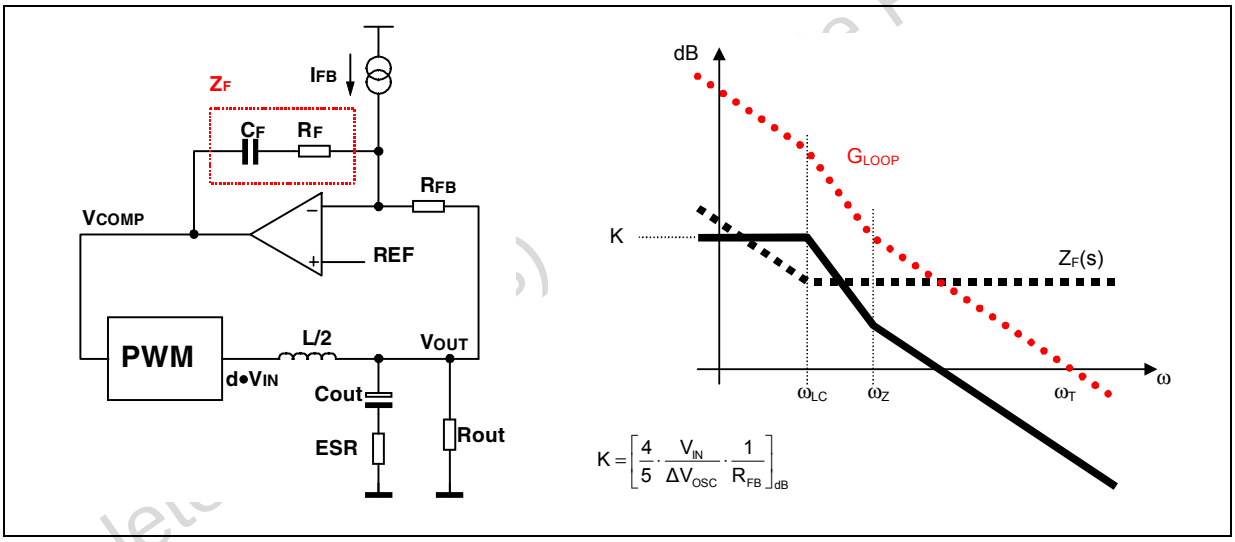

LAYOUT GUIDELINES

Since the device manages control functions and high-current drivers, layout is one of the most important things to consider when designing such high current applications.
A good layout solution can generate a benefit in lowering power dissipation on the power paths, reducing radiation and a proper connection between signal and power ground can optimize the performance of the control loops.

Integrated power drivers reduce components count and interconnections between control functions and drivers, reducing the board space.

Here below are listed the main points to focus on when starting a new layout and rules are suggested for a correct implementation.

Figure 16. Power connections and related connections layout guidelines (same for both phases).

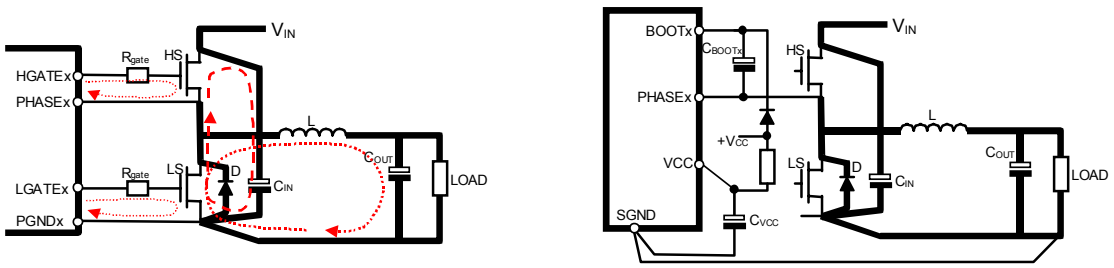

a. PCB power and ground planes areas

b. PCB small signal components placement

– Power Connections.

These are the connections where switching and continuous current flows from the input supply towards the load. The first priority when placing components has to be reserved to this power section, minimizing the length of each connection and loop as much as possible. To minimize noise and voltage spikes (EMI and losses) these interconnections must be a part of a power plane and anyway realized by wide and thick copper traces: loop must be anyway minimized. The critical components, i.e. the power transistors, must be located as close as possible one to the other.

Fig. 16a shows the details of the power connections involved and the current loops. The input capacitance (C_{IN}), or at least a portion of the total capacitance needed, has to be placed close to the power section in order to eliminate the stray inductance generated by the copper traces. Low ESR and ESL capacitors are required.

Use as much VIAs as possible when power traces have to move between different planes on the PCB: this reduces both parasitic resistance and inductance. Moreover, reproducing the same high-current trace on more than one PCB layer will reduce the parasitic resistance associated to that connection.

Connect output bulk capacitor as near as possible to the load, minimizing parasitic inductance and resistance associated to the copper trace also adding extra decoupling capacitors along the way to the load when this results in being far from the bulk capacitor bank.

– Power Connections Related.

Fig.16b shows some small signal components placement, and how and where to mix signal and power ground planes. The distance from drivers and mosfet gates should be reduced as much as possible. Propagation delay times as well as for the voltage spikes generated by the distributed inductance along the copper traces are so minimized.

In fact, the further the mosfet is from the device, the longer is the interconnecting gate trace and as a consequence, the higher are the voltage spikes corresponding to the gate PWM rising and falling signals. Even if these spikes are clamped by inherent internal diodes, propagation delays, noise and potential causes of instabilities are introduced jeopardizing good system behavior. One important consequence is that the switching losses for the high side mosfet are significantly increased.
For this reason, it is suggested to have the device oriented with the driver side towards the mosfets and the GATEx and PHASEx traces walking together toward the high side mosfet in order to minimize distance (see fig 17). In addition, since the PHASEx pin is the return path for the high side driver, this pin must be connected directly to the High Side mosfet Source pin to have a proper driving for this mosfet.

For the LS mosfets, the return path is the PGND pin: it can be connected directly to the power ground plane (if implemented) or in the same way to the LS mosfets Source pin. GATEx and PHASEx connections (and also PGND when no power ground plane is implemented) must also be designed to handle current peaks in excess of 2A (30 mils wide is suggested).

Obsolete Product(s) - Obsolete Product(s)

Figure 17. Device orientation (left) and sense nets routing (right).

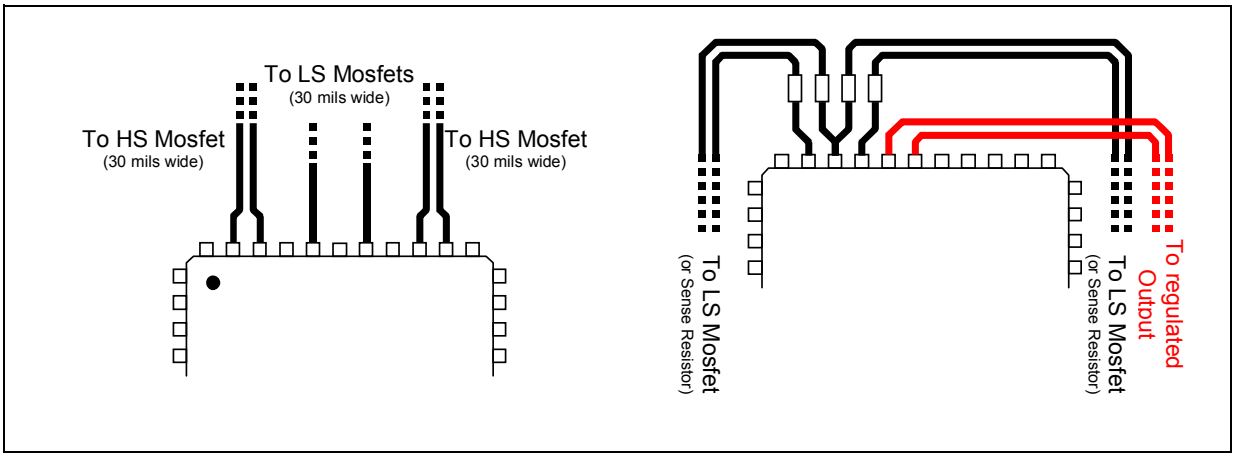

Gate resistors of few ohms help in reducing the power dissipated by the IC without compromising the system efficiency.

The placement of other components is also important:

- The bootstrap capacitor must be placed as close as possible to the BOOTx and PHASEx pins to minimize the loop that is created.
- Decoupling capacitor from VCC AND SGND placed as close as possible to the involved pins.
- Decoupling capacitor from VCCDR and PGND placed as close as possible to those pins. This capacitor sustains the peak currents requested by the low-side mosfet drivers.
- Refer to SGND all the sensible components such as frequency set-up resistor (when present) and also the optional resistor from FB to GND used to give the positive droop effect.
- Connect SGND to PGND on the load side (output capacitor) to avoid undesirable load regulation effect and to ensure the right precision to the regulation when the remote sense buffer is not used. Connect anyway in a single point (star grounding).
- An additional 100nF ceramic capacitor is suggested to place near HS mosfet drain. This helps in reducing noise.
- Filtering VSEN pin vs. GND with 1nF capacitor helps in reducing noise injection into device.
- Filtering OUTEN pin vs. GND helps in reducing false trip due to coupled noise: take care in routing driving net for this pin in order to minimize coupled noise.
- PHASE pin spikes. Since the HS mosfet switches in hard mode, heavy voltage spikes can be observed on the PHASE pins. If these voltage spikes overcome the max breakdown voltage of the pin, the device can absorb energy and it can cause damages. The voltage spikes must be limited by proper layout, the use of gate resistors, Schottky diodes in parallel to the low side mosfets and/or snubber network on the low side mosfets, to a value lower than 26V, for 20nSec, at F_{SW} of 600kHz max.

– **Current Sense Connections.**

- **Remote Buffer:** The input connections for this component must be routed as parallel nets from the FBG/FBR pins to the load in order to compensate losses along the output power traces and also to avoid the pick-up of any common mode noise. Connecting these pins in points far from the load will cause a non-optimum load regulation, increasing output tolerance.
- **Current Reading:** The Rg resistors have to be placed as close as possible to the ISENx and PGNDS pins in order to limit the noise injection into the device. Moreover, PGNDS trace must be divided just

Obsolete Product(s) - Obsolete Product(s)

after the pin and connected through Rg to the sense point (see Fig. 17). The PCB traces connecting these resistors to the reading point must be routed as parallel traces in order to avoid the pick-up of any common mode noise. It's also important to avoid any offset in the measurement and to get a better precision, to connect the traces as close as possible to the sensing elements, dedicated current sense resistor or low side mosfet R_{dsON}.

Moreover, when using the low side mosfet R_{dsON} as current sense element, the ISENx pin is practically connected to the PHASEx pin. DO NOT CONNECT THE PINS TOGETHER AND THEN TO THE HS SOURCE! The device won't work properly because of the noise generated by the return of the high side driver. In this case route two separate nets: connect the PHASEx pin to the HS Source (route together with HGATEx) with a wide net (30 mils) and the ISENx pin to the LS Drain (route together with PGNDS). Moreover, the PGNDS pin is always connected, through the Rg resistor, to the PGND: DO NOT CONNECT DIRECTLY TO THE PGND! In this case the device won't work properly. Route anyway to the LS mosfet source (together with ISENx net).

Right and wrong connections are reported in Figure 18.

Symmetrical layout is also suggested to avoid any unbalance between the two phases of the converter.

Figure 18. PCB layout connections for sense nets.

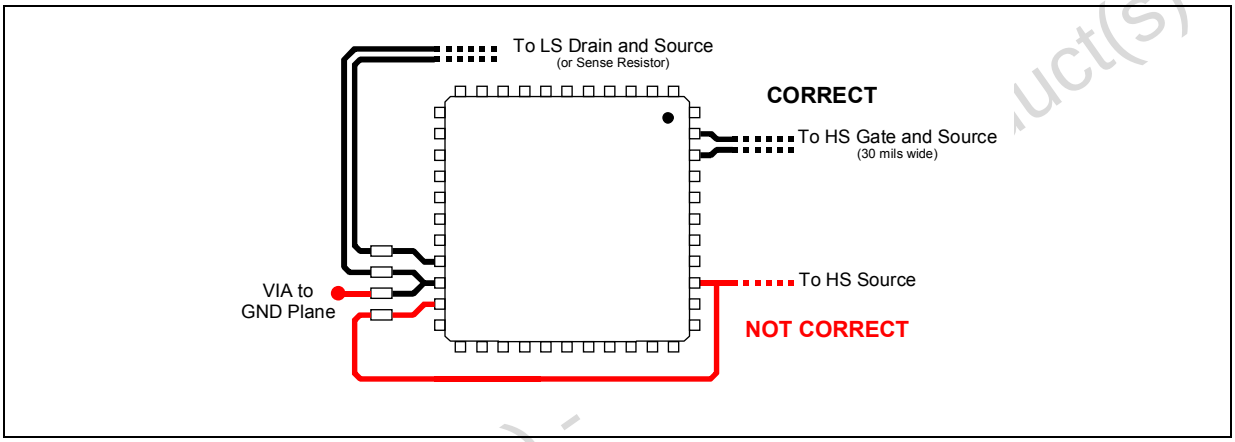

EMBEDDING L6710-BASED VRMs...

When embedding the VRM into the application, additional care must be taken since the whole VRM is a switching DC/DC regulator and the most common system in which it has to work is a digital system such as MB or similar. In fact, latest MB has become faster and powerful: high speed data bus are more and more common and switching-induced noise produced by the VRM can affect data integrity if not following additional layout guidelines. Few easy points must be considered mainly when routing traces in which switching high currents flow (switching high currents cause voltage spikes across the stray inductance of the traces causing noise that can affect the near traces):

- When reproducing high current path on internal layers, please keep all layers the same size in order to avoid "surrounding" effects that increases noise coupling.
- Keep safe guarding distance between high current switching VRM traces and data buses, especially if high-speed data bus to minimize noise coupling.
- Keep safe guard distance or filter properly when routing bias traces for I/O sub-systems that must walk near the VRD.
- Possible causes of noise can be located in the PHASE connections, Mosfet gate drive and Input voltage path (from input bulk capacitors and HS drain). Also PGND connections must be considered if not insisting on a power ground plane. These connections, that can be possible sources of noise, must be carefully kept far away from noise-sensitive data bus.

Obsolete Product(s) - Obsolete Product(s)

Since the generated noise is mainly due to the switching activity of the VRM, noise emissions depend on how fast the current switch. To reduce noise emission levels, it is also possible, in addition to the previous guidelines, to reduce the current slope and then to increase the switching times: this will cause, as a consequence of the higher switching time, an increase in switching losses that must be considered in the thermal design of the system.

Figure 19. - Layout Suggestions (not in scale).

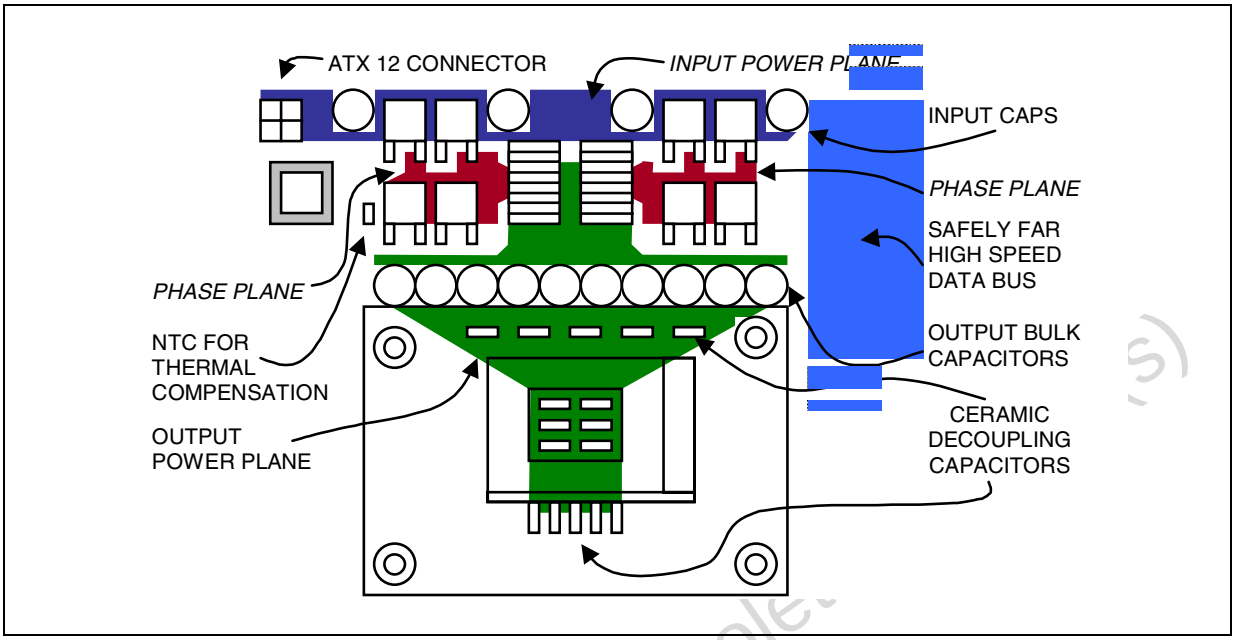

Application Board Description

The application board shows the operation of the device in a dual phase application. This evaluation board allows output voltage adjustability (0.8375V - 1.6000V) through the switches S0-S4 and high output current capability.
The board has been laid out with the possibility to use up to two D^2PACK mosfets for the low side switch in order to give maximum flexibility in the mosfet choice.

The four layers demo board's copper thickness is of 70µm in order to minimize conduction losses considering the high current that the circuit is able to deliver.

Demo board schematic circuit is reported in Figure 20.

Several jumpers allow setting different configurations for the device: JP3, JP4 and JP5 allow configuring the remote buffer as desired. Simply shorting JP4 and JP5 the remote buffer is enabled and it senses the output voltage on-board; to implement a real remote sense, leave these jumpers open and connect the FBG and FBR connectors on the demo board to the remote load.

To avoid using the remote buffer, simply short all the jumpers JP3, JP4 and JP5. Local sense through the R7 is used for the regulation.

The input can be configured in different ways using the jumpers JP1, JP2 and JP6; these jumpers control also the mosfet driver supply voltage. Anyway, power conversion starts from VIN and the device is supplied from V_{CC} (See Figure 21).

Obsolete Product(s) - Obsolete Product(s)

Figure 20. Demo Board Schematic

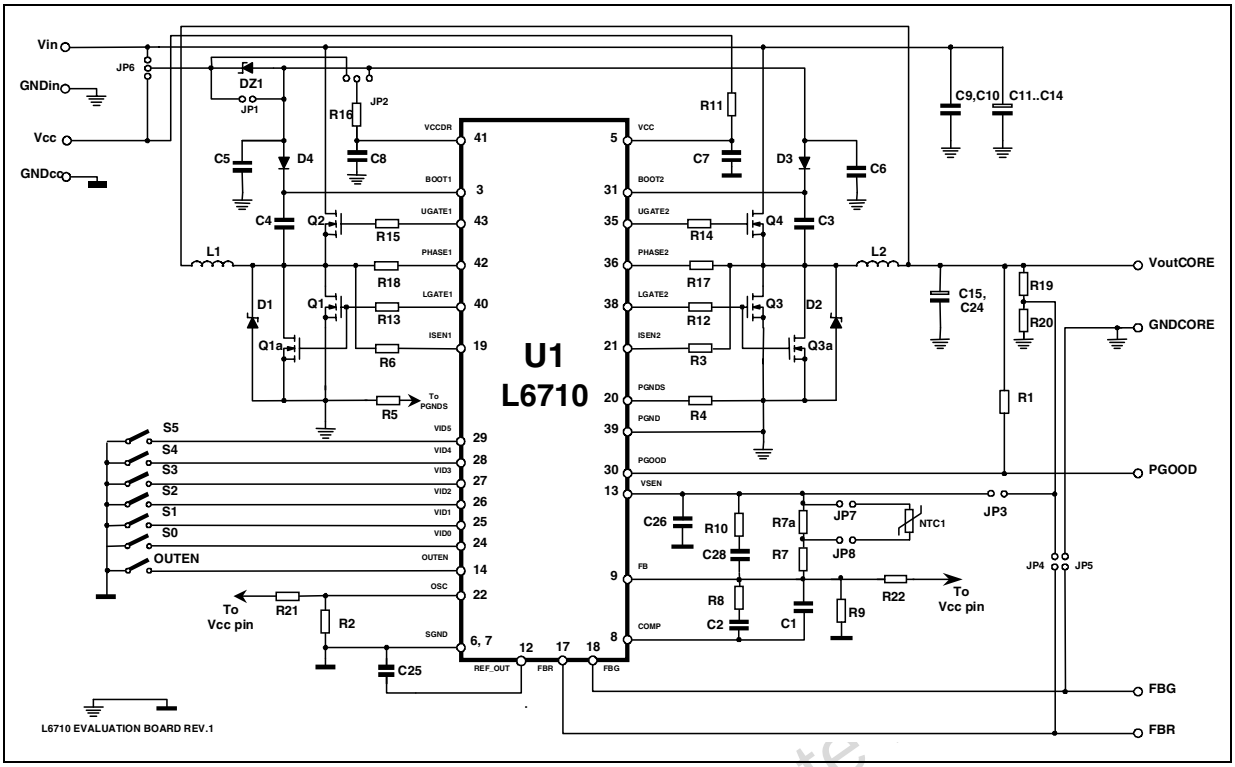

Figure 21. Power supply configuration

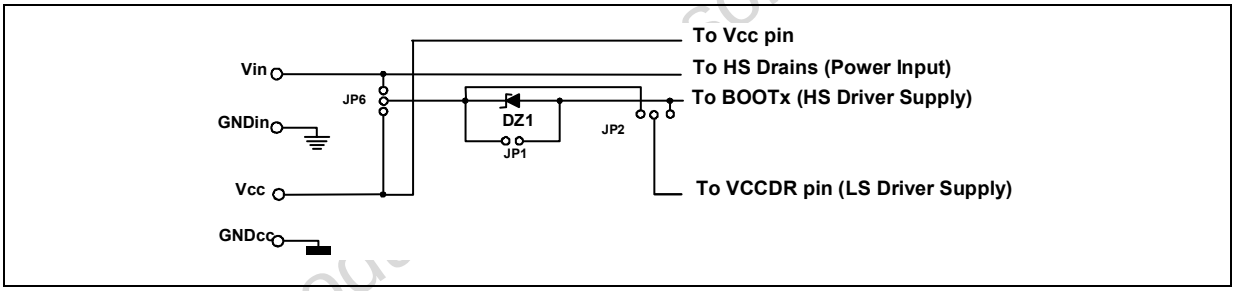

Two main configurations can be distinguished: Single Supply (V_{CC}=V_{IN}=12V) and Double Supply (V_{CC}=12V V_{IN}=5V or different).

- Single Supply: In this case JP6 has to be completely shorted. The device is supplied with the same rail that is used for the conversion. With an additional zener diode DZ1 a lower voltage can be derived to supply the mosfets driver if Logic level mosfet are used. In this case JP1 must be left open so that the HS driver is supplied with V_{IN}-V_{DZ1} through BOOTx and JP2 must be shorted to the left to use VIN or to the right to use V_{IN}-V_{DZ1} to supply the LS driver through VCCDR pin. Otherwise, JP1 must be shorted and JP2 can be freely shorted in one of the two positions.
- Double Supply: In this case VCC supply directly the controller (12V) while VIN supplies the HS drains for the power conversion. This last one can start indifferently from the 5V bus (Typ.) or from other buses allowing maximum flexibility in the power conversion. Supply for the mosfet driver can be programmed through the jumpers JP1, JP2 and JP6 as previously illustrated. JP6 selects now VCC or V_{IN} depending on the requirements.

Some examples are reported in the following Figures 22 and 23.

Obsolete Product - Obsolete

Figure 22. Jumpers configuration: Double Supply

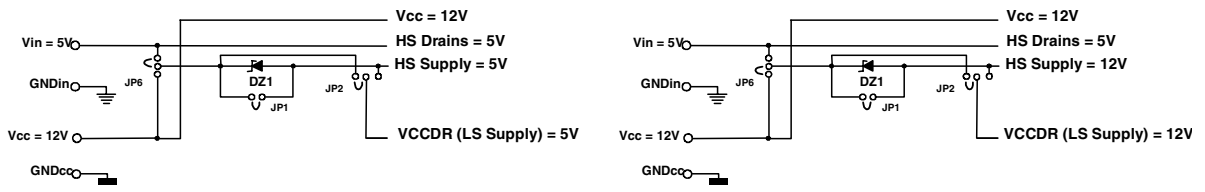

(a) V_{CC}=12V; V_{BOOTx}=V_{CCDR}=V_{IN}=5V

(b) V_{CC}=V_{BOOTx}=V_{CCDR}=12V;V_{IN}=5V

Figure 23. Jumpers configuration: Single Supply

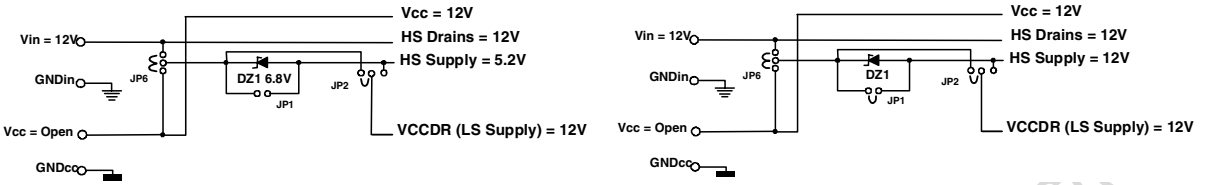

(a) V_{CC}=V_{IN}=V_{CCDR}=12V; V_{BOOTx}=5.2V

(b) V_{CC}=V_{IN}=V_{BOOTx}=V_{CCDR}=12V

Figure 24. PCB and Components Layouts

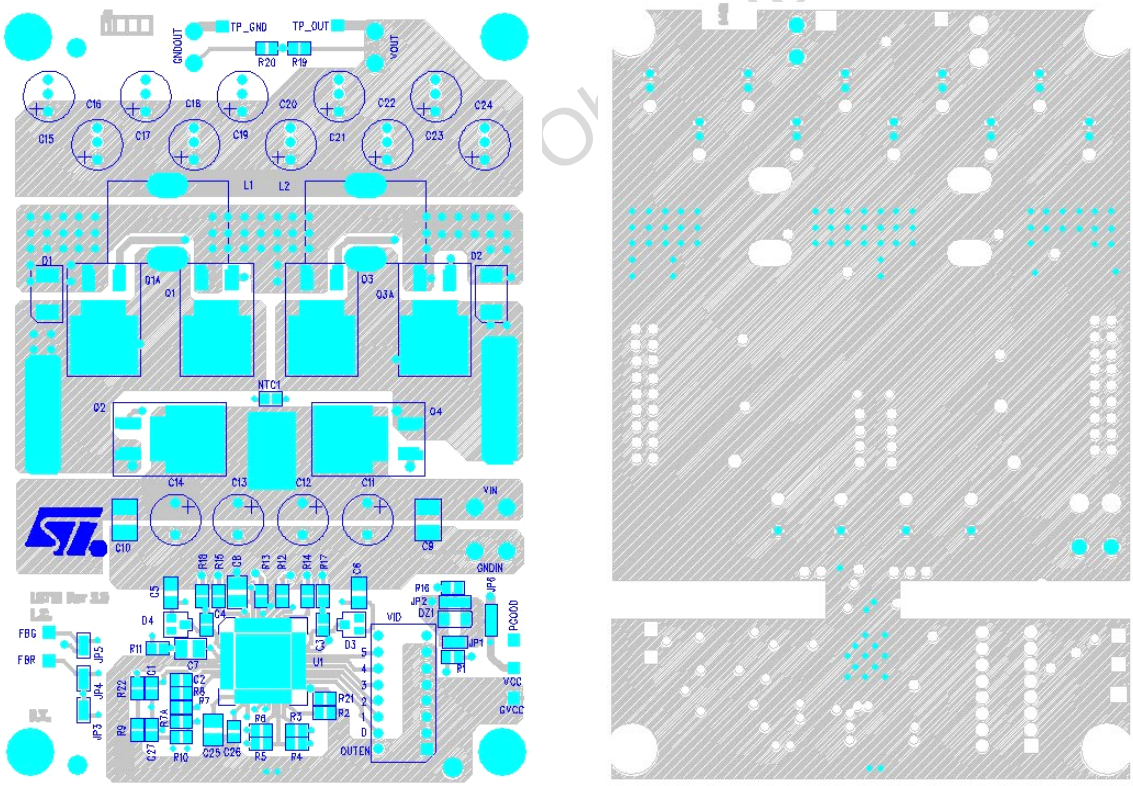

Component Side

Internal PGND Plane

Obsolete Product

Figure 25. PCB and Components Layouts

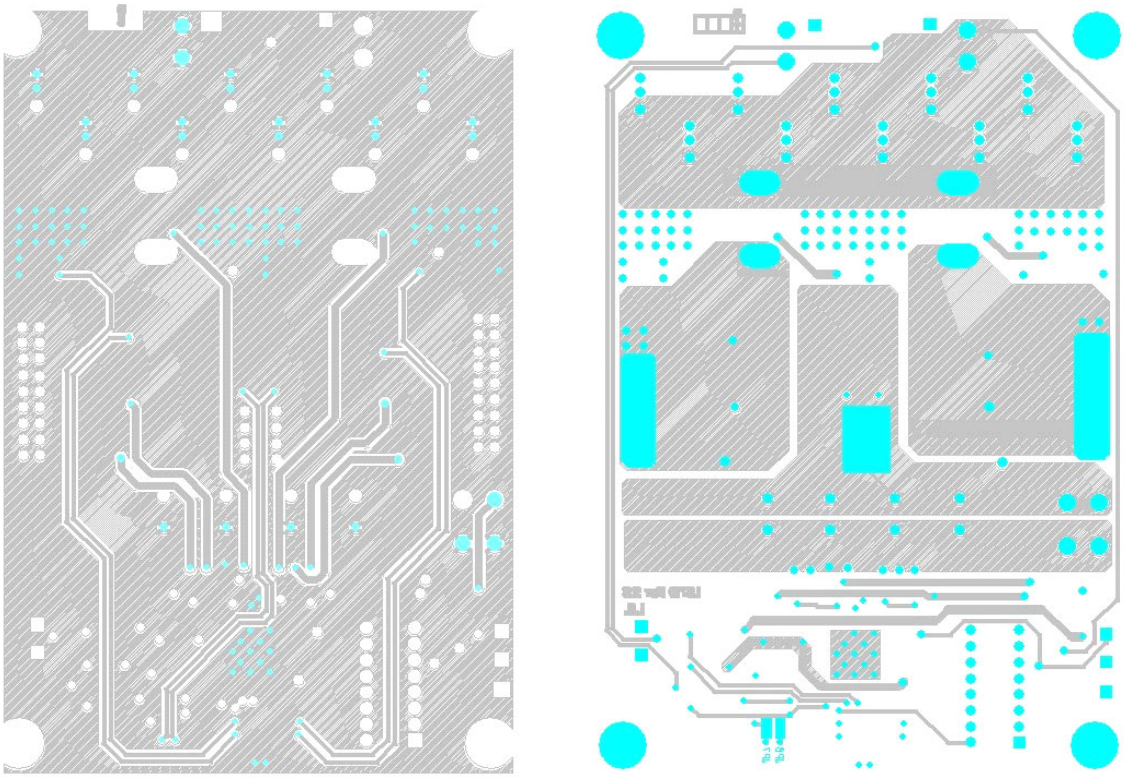

Internal SGND Plane

Solder Side

Part List - $12V_{IN}$ - $1.35V_{OUT}$ - $78A_{OUT}$ (VRD 10)

Code	Value	Description	Vendor	size
Resistors				
R1	10k	PGOOD pull-up		SMD 0805
R2, R21	Not Mounted	Frequency modification		SMD 0805
R3, R4, R5, R6	4.7k - 1%	Rg		SMD 0805
R7	2k - 1%	R_{FB} network		SMD 0805
R7a	22k - 1%	R_{FB} network		SMD 0805
R8	8.2k	R_F		SMD 0805
R9, R22	Not Mounted	Output Voltage Offset		SMD 0805
R10	510	Comp. Network		SMD 0805
R11	82	VCC Filter		SMD 0805
R12, R13, R14, R15	2.2	Gate Resistors		SMD 0805
R16	0	VCCDR Filter		SMD 0805
R17, R18	0			SMD 0805
R19	0	External divider		SMD 0805
R20	Not Mounted	External divider		SMD 0805
NTC1	1k	Thermal compensation	Panasonic ERTJIVT102H	SMD 0603

Obsolete Product(s) - Obsolete

Part List - $12V_{IN}$ - $1.35V_{OUT}$ - $78A_{OUT}$ (VRD 10) (continued)

Code	Value	Description	Vendor	size
Capacitors				
C1	220p	Comp Network		SMD 0805
C2	22n	C_F		SMD 0805
C3, C4	100n	Bootstrap capacitors		SMD 0805
C5, C6	1µ	Input ceramic capacitors		SMD 1206
C7	10µ	VCC Filter		SMD 1206
C8	10µ	VCCDR Filter		SMD 1206
C9, C10	22µ - 16V	Input Filter	TDK C4532X7R1C226MT Panas. ECJ4YB1C226M	SMD 1812 SMD 1210
	10µ - 16V		TDK C4532X7R1C106MT	SMD 1812
C11, C12, C13, C14	1800µ - 16V	Input Filter	Rubycon MBZ or Panas. EEUFJ1C182Y	Radial 10x23 Radial 10x25
C15 to C24	2200µ - 6.3V	Output Filter	Rubycon MBZ or Panas. EEUFL0J222	Radial 10x20
C25	47n	REF_OUT Filter		SMD 0805
C26	1n	VSEN Filter		SMD 0805
C28	47n	Comp. Network		SMD 0805
Diodes				
DZ1	Not mounted			Mnimelf
D1, D2	STPS340U	Synch. Diode	STMicroelectronics	SMB
D3, D4	1N4148	Bootstrap diodes	STMicroelectronics	SOT23
Inductors				
L1, L2	0.7 µ / 1m	Main inductor	77121 core 4T 2x1.5 mm	
Mosfets				
Q1, Q1a, Q3, Q3a	STB90NF03L	LS Mosfet	STMicroelectronics	D2PACK
Q2, Q4	STB90NF03L	HS Mosfet	STMicroelectronics	D2PACK
Devices				
U1	L6710	PWM controller	STMicroelectronics	TQFP44

Obsolete Product(s) - Obsolete Product(s)

STATIC PERFORMANCES

Figure 26. - System Efficiency and Mosfet Temperature (Tamb=27deg, 4CFM, 400kHz effective switching frequency).

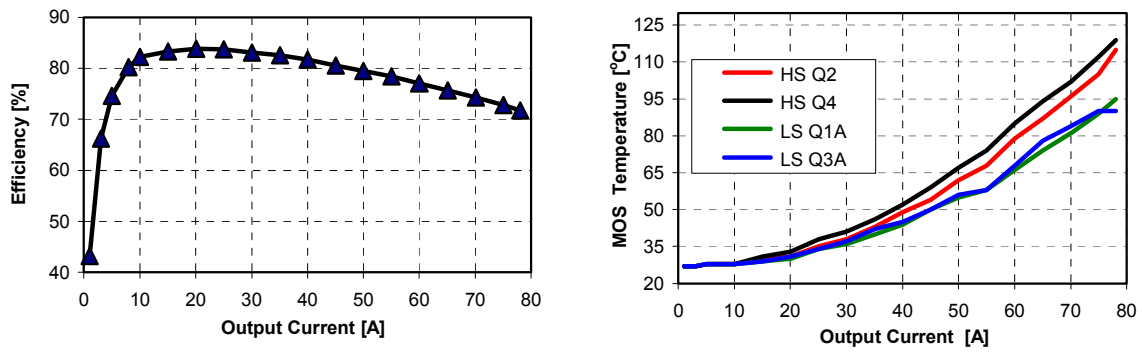

Figure 27. Load Regulation.

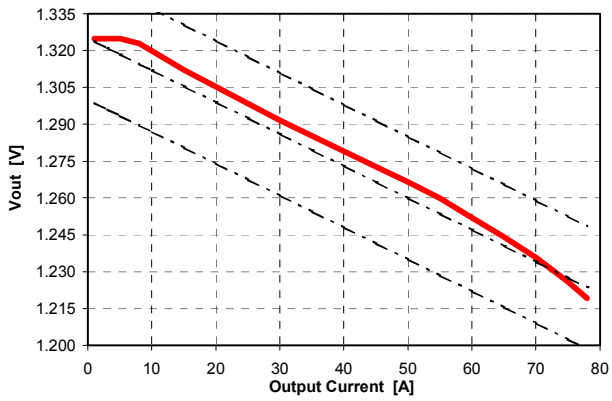

Obsolete Product(s)

DYNAMIC PERFORMANCES

Figure 28. 0A to 78A Load Transient Response.

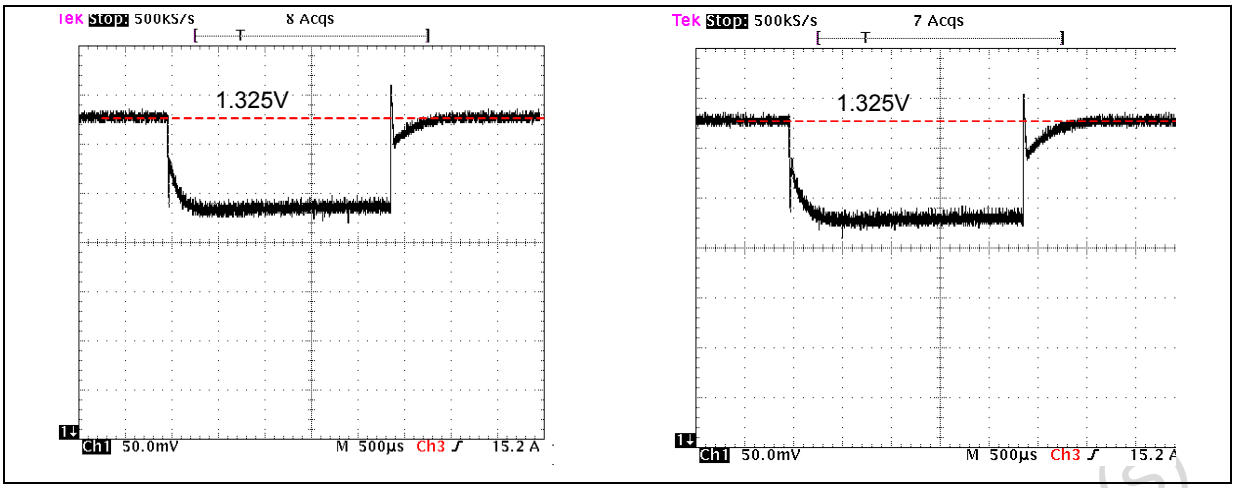

Figure 29. Dynamic VID at 0A

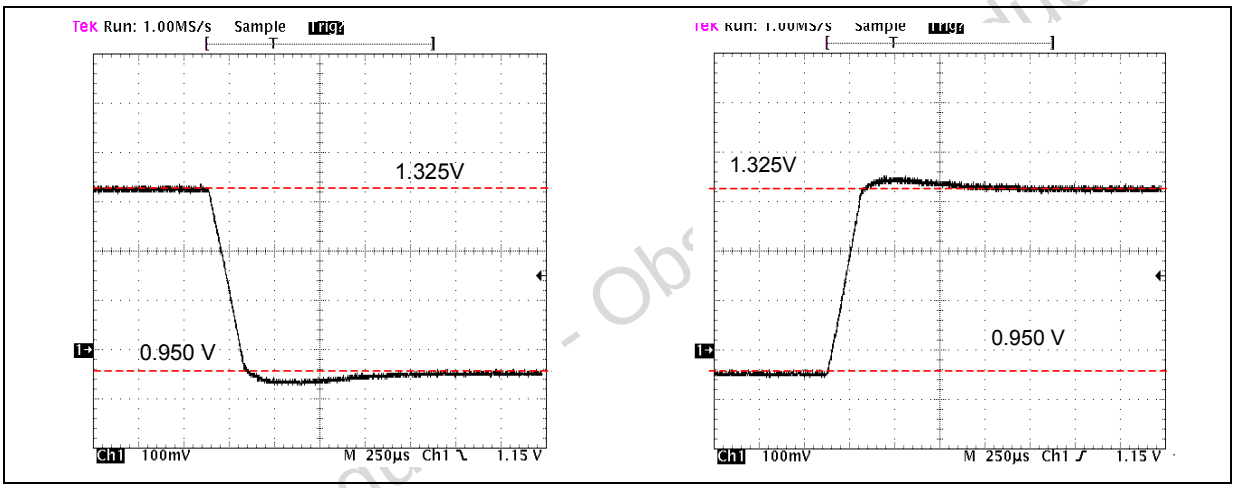

Figure 30. Dynamic VID at 78A.

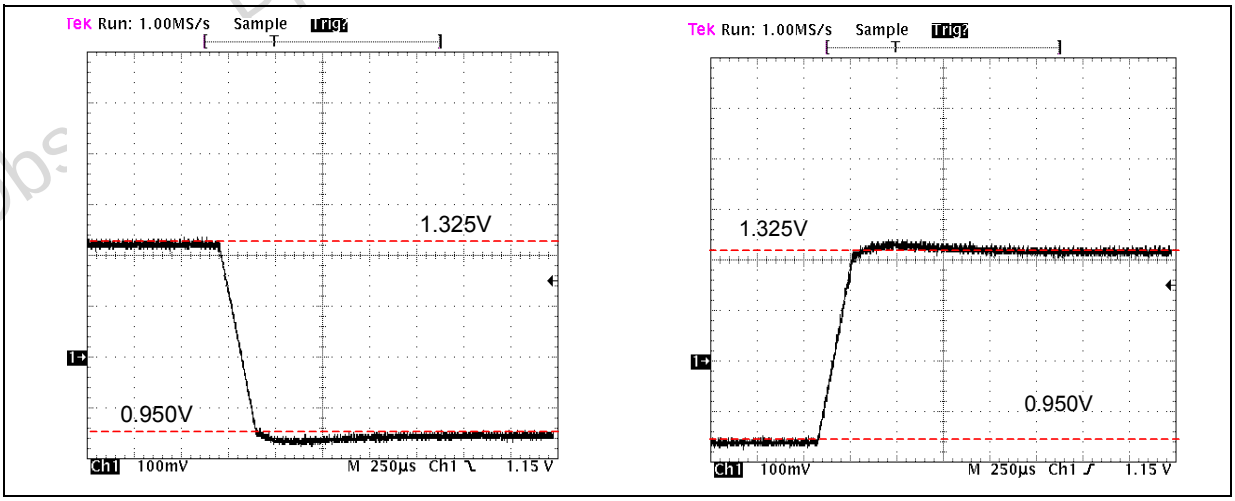

DIM.	mm			inch		
	MIN.	TYP.	MAX.	MIN.	TYP.	MAX.
A			1.20			0.047
A1	0.05		0.15	0.002		0.006
A2	0.95	1.00	1.05	0.037	0.039	0.041
b	0.30	0.37	0.45	0.012	0.015	0.018
c	0.09		0.20	0.004		0.008
D	11.80	12.00	12.20	0.464	0.472	0.480
D1	9.80	10.00	10.20	0.386	0.394	0.401
D2	3.90		6.05	0.153		0.238
D3		8.00			0.315	
E	11.80	12.00	12.20	0.464	0.472	0.480
E1	9.80	10.00	10.20	0.386	0.394	0.401
E2	3.90		6.05	0.153		0.238
E3		8.00			0.315	
e		0.80			0.031	
L	0.45	0.60	0.75	0.018	0.024	0.030
L1		1.00			0.039	
k	0˚(min.), 3.5˚(typ.), 7˚(max.)					
ccc			0.08			0.003

OUTLINE AND MECHANICAL DATA

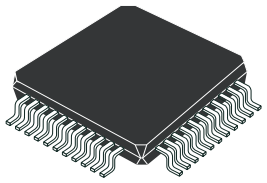

Body: 10 x 10 x 1.0mm

TQFP44 - EXPOSED PAD

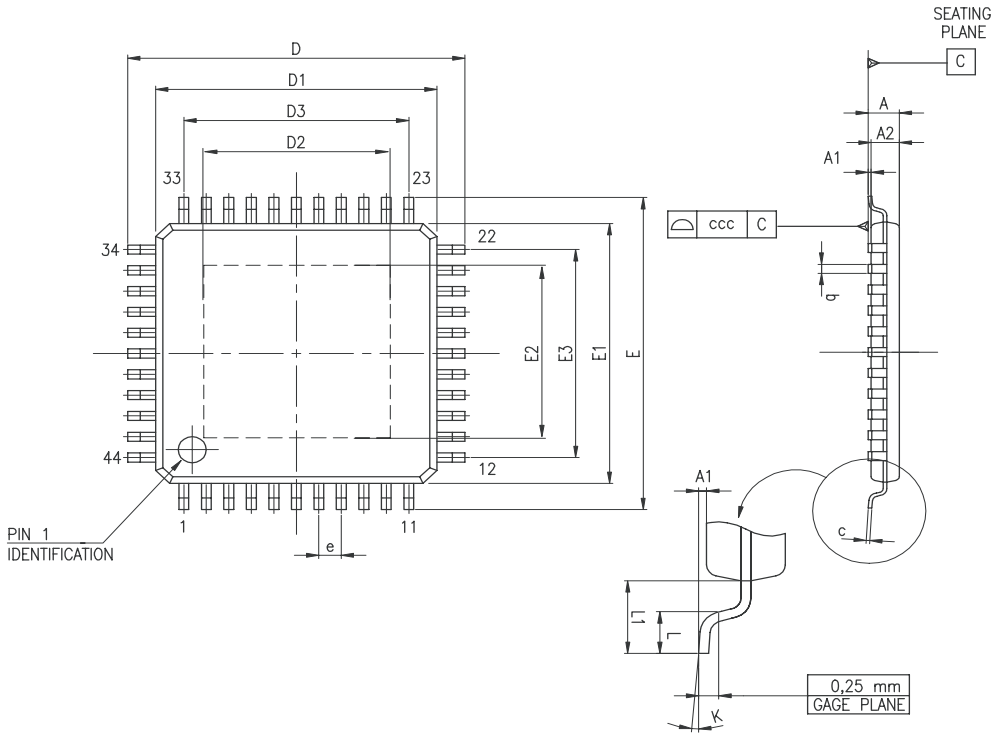

7278837 B (L6710)

Obsolete Product(s) - Obsolete Product(s)

Information furnished is believed to be accurate and reliable. However, STMicroelectronics assumes no responsibility for the consequences of use of such information nor for any infringement of patents or other rights of third parties which may result from its use. No license is granted by implication or otherwise under any patent or patent rights of STMicroelectronics. Specifications mentioned in this publication are subject to change without notice. This publication supersedes and replaces all information previously supplied. STMicroelectronics products are not authorized for use as critical components in life support devices or systems without express written approval of STMicroelectronics.

The ST logo is a registered trademark of STMicroelectronics.
All other names are the property of their respective owners

© 2004 STMicroelectronics - All rights reserved

STMicroelectronics GROUP OF COMPANIES
Australia - Belgium - Brazil - Canada - China - Czech Republic - Finland - France - Germany - Hong Kong - India - Israel - Italy - Japan - Malaysia - Malta - Morocco - Singapore - Spain - Sweden - Switzerland - United Kingdom - United States
www.st.com